Intronics Power®

Precision Isolation Amplifier
High CMV/CMR, ±15V Floating Power

MODEL 277

FEATURES

- Versatile Op Amp Front End: Inverting, Non-Inverting, Differential Applications
- Low Nonlinearity: 0.025% max, Model 277K
- Low Input Offset Voltage Drift: 1µV/°C max, Model 277K
- Floating Power Output: ±15V @ ±15mA
- High CMR: 160dB min @ dc
- High CMV: 3500V_{rms}

APPLICATIONS

- Programmable Gain Isolated Amplifier
- Isolated Power Source and Amplifier for Bridge Measurements
- Instrumentation Amplifier
- Instrumentation Grade Process Signal Isolator
- Current Shunt Measurements

GENERAL DESCRIPTION

Model 277 is a versatile isolation amplifier which combines a high-performance, uncommitted operational amplifier front end with a precision, isolated output stage and a floating power supply section. This configuration, shown in Figure 1, makes the 277 ideally suited to instrumentation applications where the need for various forms of signal conditioning, high CMV protection and isolated transducer power requirements are encountered.

The input stage is a low drift (±1µV/°C max, model 277K) differential op amp that may be connected for use in inverting, non-inverting and differential configurations. The circuitry employed around the operational amplifier input stage can be designed by the user to suit each application's particular signal processing needs. A full ±10V signal range is available at the output of the front end amplifier.

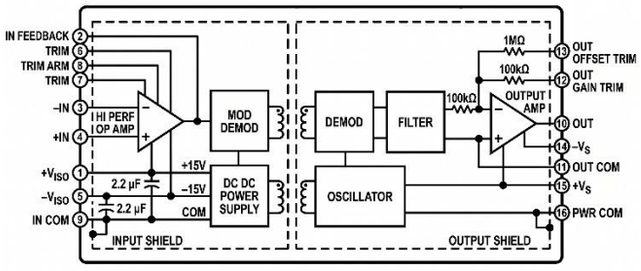

Figure 1. Model 277 Functional Block Diagram

The isolated output stage includes a special modulator/demodulator technique which provides the 277 with 160dB minimum DC common mode rejection between input and output common, and an input-to-output CMV rating of 3500V_{rms}. When

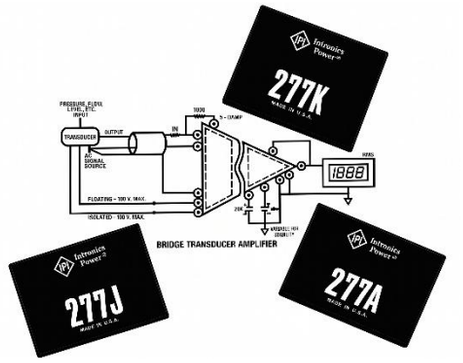

combined with the output stage's low nonlinearity (0.05%, models 277J/A and 0.025% model 277K), these high CMR and CMV ratings facilitate accurate measurements in the presence of noisy electrical equipment such as motors and relays. In addition, model 277A offers a −25°C to +85°C rated operating temperature range. All versions of model 277 have a ±10 volt output range.

The floating power supply section provides isolated ±15 volt outputs capable of delivering currents up to ±15mA. This feature permits model 277 to power transducers and auxiliary isolated circuitry, thereby eliminating the need for a separate isolated DC/DC converter.

All of the features of the model 277 isolation amplifier are packaged in a compact (3″ × 2.2″ × 0.59″) module. As an assurance of high performance reliability, every model 277 is factory tested for CMV rating by application of 3500V_{rms} (±4900V peak) between input and output common terminals for one minute (meets NEMA and CSA requirements for 660V_{rms} service). In addition, the 277 has a calculated MTBF of 133,000 hours.

600 Weaver Park Rd Longmont, CO 80501
PHONE: 781-551-5500 FAX: 781-551-5555

SPECIFICATIONS (typical at +25°C and ±15V unless otherwise noted)

MODEL	277J	277K	277A
INPUT STAGE PERFORMANCE[1],[2]			
OPEN LOOP GAIN	106dB min	*	*
INPUT OFFSET VOLTAGE			
Initial, @ +25°C (Adjustable to Zero)	±1.5mV max	*	*
vs. Temperature			
Offset Untrimmed	±5µV/°C max	*	±5µV/°C
Offset Trimmed to Zero	±3µV/°C max	±1µV/°C max	*
vs. Supply Voltage	±30µV/V	*	*
vs. Time	±3.5µV/mo	*	*
INPUT BIAS CURRENT			
Initial, @ +25°C	±20nA max	*	*
vs. Temperature	±50pA/°C	*	*
vs. Supply Voltage	±100pA/V	*	*
INPUT DIFFERENCE CURRENT			
Initial, @ +25°C	±6nA	*	*
vs. Supply Voltage	±50pA/V	*	*
INPUT IMPEDANCE			
Differential	4MΩ	*	*
Common Mode[3]	100MΩ ‖ 4pF	*	*
INPUT NOISE			
Voltage, 0.01Hz to 10Hz	1µV p-p	*	*
10Hz to 1kHz	3µV rms	*	*
Current, 0.01Hz to 10Hz	35pA p-p	*	*
INPUT VOLTAGE RANGE			
Common Mode Voltage[3]	±10V min	*	*
Common Mode Rejection[3], CMV = ±10V, 60Hz	100dB	*	*
Max Safe Differential Voltage	±13V	*	*
ISOLATED POWER OUTPUT[4]			
Voltage/Current[2]	±15V @ ±15mA max	*	*
Load Regulation (No Load – Full Load)	+0, −6%	*	*
Line Regulation	1V/V	*	*
Ripple, Full Load	30mV p-p @ 70kHz	*	*
OUTPUT STAGE PERFORMANCE			
GAIN	1V/V	*	*
Gain Error	±0.5% max	*	*
vs. Temperature	±50ppm/°C max	*	*
Nonlinearity, ±10V Output	±0.05% max	±0.025% max	*
VOLTAGE RATINGS[5]			
Max CMV, Output Com/Input Com			
AC, 60Hz, 1 Minute	3500V_{rms} max	*	*
Nonrecurring Spike (<1 Second)	±5000V pk max	*	*
Peak AC or DC, Continuous	±2500V max	*	*
CMR, Output Com/Input Com[5]			
DC	160dB min	*	*
60Hz	120dB min	*	*
Leak. Cur., Input/Output 115V_{rms}, 60Hz	1µA rms max	*	*
ISOLATION IMPEDANCE[5]			
Input Com/Output Com	10^{12}Ω ‖ 6pF	*	*
OUTPUT OFFSET VOLTAGE			
Initial, @ +25°C (Adjustable to Zero)	±10mV max	*	*
vs. Temperature	±100µV/°C max	±50µV/°C max	±100µV/°C max
vs. Supply Voltage	±1mV/V	*	*
vs. Time	±100µV/mo	*	*
FREQUENCY RESPONSE			
Small Signal, −3dB	2.5kHz	*	*
Full Power, 20V p-p Output	1.5kHz	*	*
Settling Time ±10V Step to 0.1%	1ms	*	*
RATED OUTPUT			
Voltage/Current	±10V min @ ±5mA min	*	*
OUTPUT NOISE			
Voltage, 0.01Hz to 10Hz	7µV p-p	*	*
10Hz to 1kHz	25µV rms	*	*
POWER SUPPLY			
Voltage, Rated Performance	±15VDC	*	*
Voltage, Operating	±(14 to 16)VDC	*	*
Current, Quiescent	+35, −5mA	*	*
TEMPERATURE RANGE			
Rated Performance	0 to +70°C	*	−25°C to +85°C
Operating	−25°C to +85°C	*	*
Storage	−55°C to +85°C	*	*
CASE SIZE	3.0" × 2.20" × 0.59"	*	*

NOTES:

[1] Current drawn from INPUT FEEDBACK terminal must be <5mA.

[2] Total current drawn from IN FEEDBACK and either +V_{iso} or −V_{iso} must be <15mA.

[3] Input common mode specifications are measured at +IN and −IN terminals with respect to INPUT COM.

[4] Protected for momentary shorts to IN COM.

[5] Isolation specifications are measured at INPUT COM with respect to OUT COM and PWR COM.

*Specifications same as model 277J.

Specifications subject to change without notice

OUTLINE DIMENSIONS

Dimensions shown in inches and (mm)

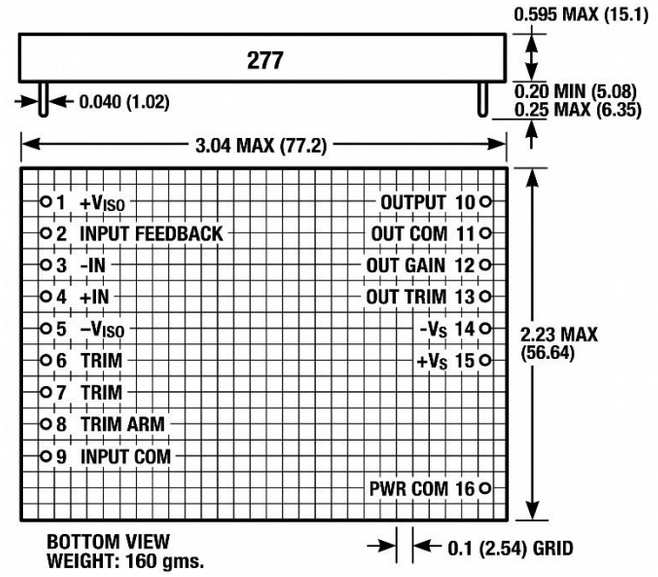

MATING SOCKET – AC1053

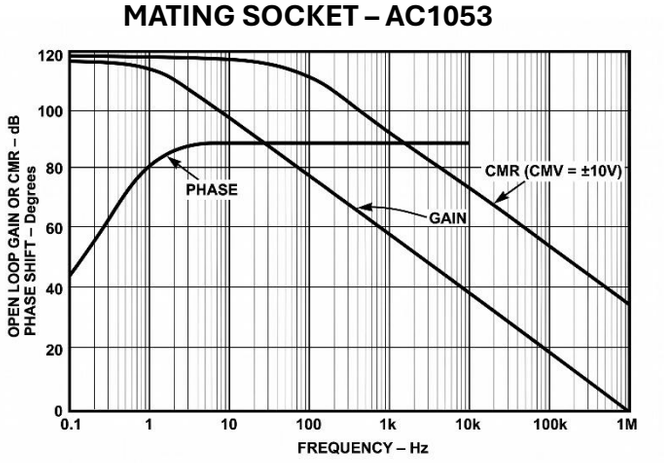

Figure 2. Input Stage Gain, CMR and Phase vs. Frequency

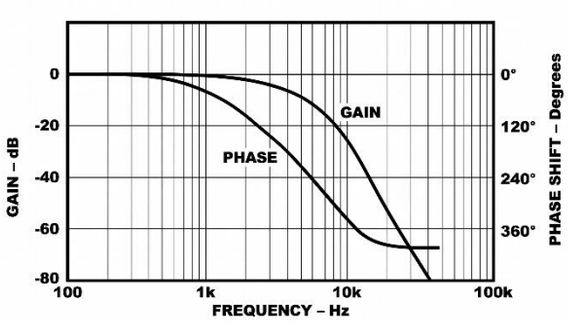

Figure 3. Output Stage Gain and Phase vs. Frequency

PERFORMANCE CHARACTERISTICS

Gain Nonlinearity: Nonlinearity error is expressed as a % of peak-to-peak output voltage span; e.g. ±0.05% @ 10V p-p output = ±5mV max RTO nonlinearity error. Model 277 is available in two maximum nonlinearity grades – ±0.05% (277J/A), ±0.025% (277K).

The nonlinearity of model 277 is virtually independent of output voltage swing. Therefore, the 277 can be used at any level of gain and output signal range up to ±10V while maintaining its excellent linearity characteristics.

Output Voltage Noise: Peak-to-peak output voltage noise is dependent on bandwidth, as shown in Figure 4. The graph shows RTO noise, that is, output noise for a gain of 1V/V through the isolator. For lowest noise performance, a low pass filter at the output can be used to roll-off noise and undesired signal frequencies beyond the bandwidth of interest. As gain increases, voltage noise referred-to-input decreases, resulting in higher input signal to noise ratios. The next section demonstrates how voltage noise, referred-to-input, can be calculated.

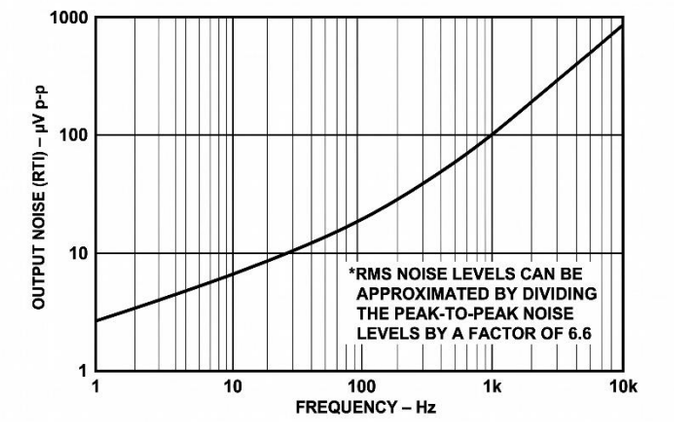

Figure 4. Output Voltage Noise vs. Bandwidth

RTI Offset Voltage, Drift and Noise: Offset voltage, referred to input (RTI) for model 277 may be computed by treating the isolator as two cascaded amplifier stages. The input stage has variable gain G_1 while the output isolation stage has a fixed gain of 1. RTI offset is given by:

E_{os} (RTI) = $E_{os1} + E_{os2}/G_1$

where:

E_{os1} = total input stage offset voltage

E_{os2} = output stage offset voltage

G_1 = input stage gain

Offset voltage drift, RTI, may be calculated in the same manner.

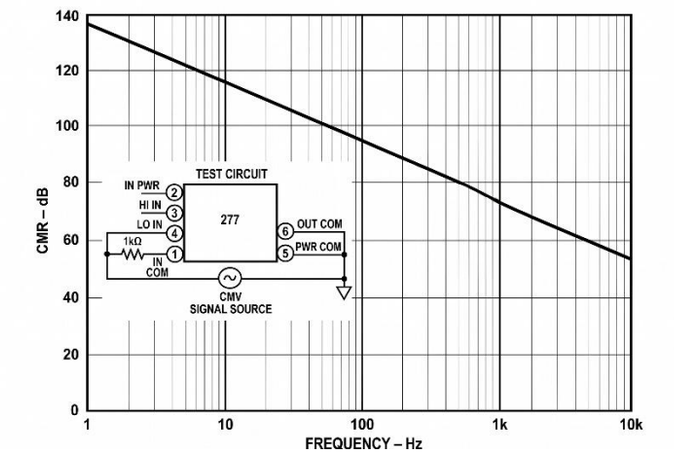

Figure 5. Input-to-Output CMR vs. Frequency with 1kΩ Source Imbalance

RTI noise, in a given bandwidth, (for Figure 8a) may be calculated as follows:

E_n (rms, RTI) = $\sqrt{[E_{n_1}^2 + (E_{n_2}/G_1)^2]}$

where:

E_{n_1} = total rms input stage voltage noise

E_{n_2} = rms output voltage noise (RTO)

Common Mode Rejection: A 160dB rejection of potential differences between input and output common is achieved in model 277 by maintaining low coupling capacitance between the input and output stages. Input-to-output rejection is a function of frequency as shown in Figure 5 under the adverse condition of 1kΩ in series with IN COM. CMR versus frequency for the input stage is shown in Figure 2.

The section on GUARDING TECHNIQUES & INTERCONNECTION demonstrates how to calculate total CMR error for the isolator and indicates the precautions to be taken to preserve the model 277's inherently excellent CMR performance.

GUARDING TECHNIQUES & INTERCONNECTION

Model 277 CMR performance is best preserved by using shielded signal cable with the shield connected as close as possible to signal low and IN COM to reduce pickup (see Figure 6).

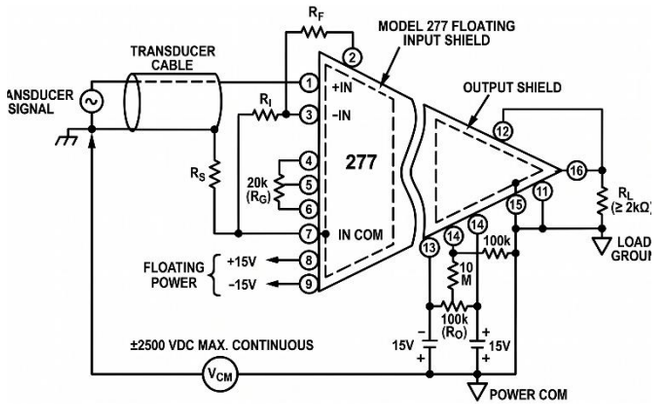

NOTES:

1. GAIN = $1 + \frac{R_F}{R_I}$ (NON-INVERTING CONFIGURATION)
2. OPTIONAL INPUT OFFSET TRIM (R_I) AND OPTIONAL OUTPUT OFFSET TRIM (R_O) ARE SHOWN: WHEN R_O AND R_I ARE NOT USED LEAVE PINS 6, 7, 9, 13 OPEN

Figure 6. Transducer, Power, Gain Resistors, and Shielding Interconnection

Overall CMR error at the output (e_{err}) is due to the CMR of the input amplifier and the CMR between input and output stages and is given by:

$e_{err} = (e_{cm} / CMR_{in})(G_1) + e_{io} / CMR_{io}$

where:

e_{cm} = input amp CMV with respect to IN COM

e_{io} = CMV between OUT COM and signal ground

CMR_{in} = CMR of the input op amp

CMR_{io} = CMR from input IN COM to OUT COM

G_1 = input stage gain

To preserve CMR_{in}, amplifier source impedances should be balanced with respect to IN COM. Components connected to the input should be enclosed by a shield tied to IN COM to reduce CMR_{io} degradation due to unguarded capacitance to ground.

High CMR_{io} is maintained with low capacitance between IN COM and OUT COM. For best CMR performance, printed circuit layouts should minimize stray capacitance between input and output stages. *Do not run a ground plane under the isolator since this increases input-output coupling.* CMR_{io} also degrade:

at high frequencies by resistance (R_s) between IN COM and signal ground. Voltage between OUT COM and source ground divides between this resistance (generally wire resistance) and the input-to-output capacitance resulting in an input error signal. If R_s becomes excessive, a capacitor from +IN to OUT COM will help compensate for its effect on CMR. The capacitor must withstand the isolation voltages encountered.

ADJUSTMENT PROCEDURE

The input and output offset voltage of model 277 can be trimmed as shown below with the isolator set up in the desired circuit configuration.

(1) Refer to Figure 6 for terminal and component designations.
(2) Connect IN COM to OUT COM and set input signal to zero.
(3) Place floating DVM across IN FDBK and OUTPUT terminals.
(4) Null DVM reading using output offset trim potentiometer R_o.
(5) Disconnect IN COM from OUT COM.
(6) Place DVM across IN FDBK and IN COM terminals.
(7) Adjust input offset trim potentiometer, R_i, until DVM reads zero volts.

The overall gain of the isolator may be increased over a limited range (5%) with a 5kΩ potentiometer connected between pins 10 and 12.

APPLICATIONS

Programmable Gain Bridge Transducer Amplifier: The versatility of model 277 is shown by the programmable gain bridge transducer amplifier application of Figure 7. In this circuit the 277's uncommitted front end and floating voltage output permit both bridge excitation and signal gain conditioning to be provided by the isolation amplifier. Control switches are driven by TTL inputs which are isolated from source ground by the opto-isolators in the control switch. Control signals operate the CMOS switch network to establish the gains shown in the table in Figure 7. The CMOS switch network is operated in a manner that causes the resistance of the switches only to be in series with the negative input of the isolator and not in series with the gain setting resistors. With this arrangement the switch resistance does not affect gain accuracy. A resistor, R_s, should be in series with −IN to reduce errors due to bias current drift.

With this circuit the isolator gain can be remotely set at a value that optimizes input signal-to-noise ratio and eliminates the need for high quality post-amplifiers at the isolator output. This network is extremely useful in wide dynamic range measurements such as flow, level or pressure where auto-gain ranging would be a desirable system instrumentation feature.

INPUT CONFIGURATION

Model 277's input stage is an isolated, uncommitted operational amplifier that may be configured to suit a variety of applications. Model 277 may be used in the same way as any op amp except that the feedback is taken from the FDBK terminal rather than the OUTPUT pin. Figure 8 shows four typical input configurations for interfacing with a wide range of signal sources.

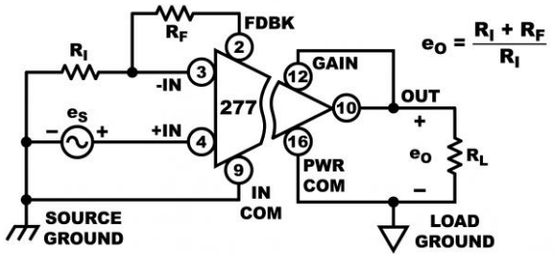

(a) Non-Inverting Configuration

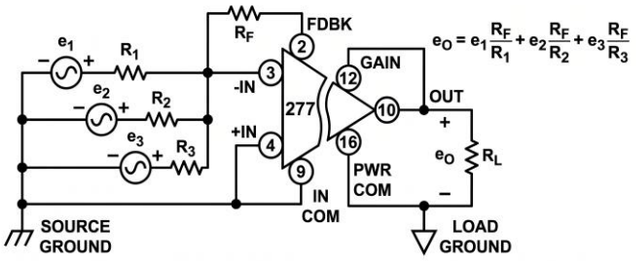

(b) Summing Configuration

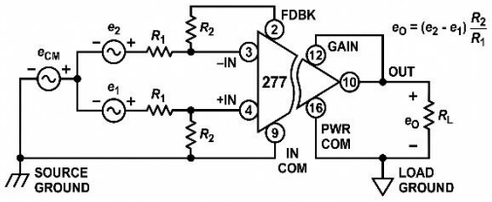

(c) Isolated Differential Configuration

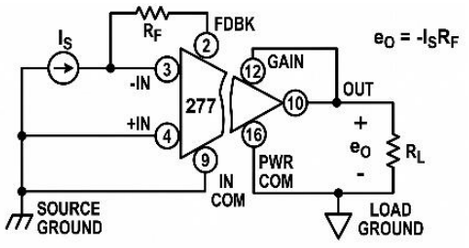

(d) Current Source Amplifier Configuration

Figure 8. Model 277 Input Amplifier Configurations

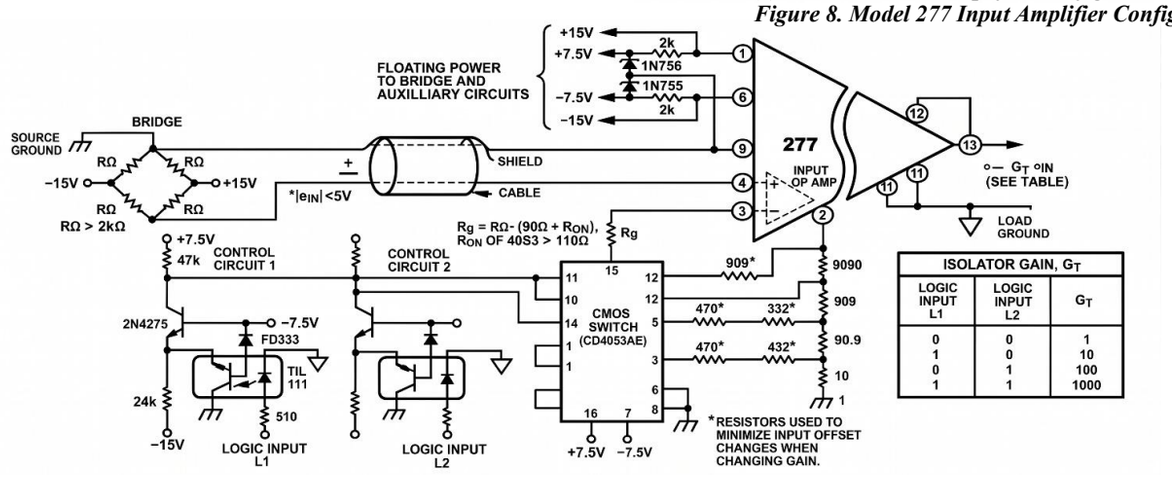

Figure 7. Programmable Gain Bridge Transducer Amplifier