High CMV, High Performance Isolation Amplifiers

MODELS 284J, 286J, 281

FEATURES

- High CMV Isolation: ±5000V pk, 10ms Pulse; ±2500V dc Continuous
- High CMR: 110dB min with 5kΩ Imbalance
- Low Nonlinearity: 0.05% @ 10V pk-pk Output
- High Gain Stability: ±0.0075%/°C, ±0.001%/1000 hours
- Low Input Offset Voltage Drift: 10µV/°C, G = 100V/V (Model 286J)
- Resistor Programmed Gain: 1 to 10V/V (284J) 1 to 100V/V (286J)
- Isolated Power Supply: ±8.5V dc @ ±5mA (284J) ±15V dc @ ±15mA (286J)
- Meets IEEE Std 472: Transient Protection (SWC)
- Meets UL Std 544 Leakage @ 115V ac, 60Hz: 2.0µA max (284J) 2.5µA max (286J)

APPLICATIONS

- Fetal Heartbeat Monitoring
- Multi-Channel ECG Recording
- Ground Loop Elimination in Industrial and Process Control
- High Voltage Protection in Data Acquisition Systems
- 4-20mA Isolated Current Loop Receiver

GENERAL DESCRIPTION

The models 284J, 286J are low cost, high performance isolation amplifiers designed for high CMV isolation and low leakage in biomedical, industrial and data acquisition systems. Using modulation techniques with reliable transformer isolation, the models 284J, 286J protect both patients and ultra-sensitive equipment from high CMV transients up to ±5000V pk (10ms pulse) or 2500V dc continuous, high CMR of 110dB (5kΩ imbalance) and feature maximum leakage current of less than 3µA rms, @ 115V ac, 60Hz (inputs to power common).

The model 284J is a self-contained isolation amplifier for single channel applications. For multi-channel applications, the model 286J combined with an external synchronizing oscillator such as the model 281 may be used; up to 16 model 286J amplifiers can be driven from 1 model 281 oscillator. Additional channels may be obtained by configuring an unlimited number of 284Js with several ganged 281 oscillators.

Both models also provide resistor-programmable gain of 1 to 10V/V (284J) or 1 to 100V/V (286J), high gain stability of 0.0075%/°C, low nonlinearity of 0.05% @ 10V pk-pk output and isolated power supply outputs of ±15V dc @ ±15mA (286J) or ±8.5V dc @ ±5mA (284J).

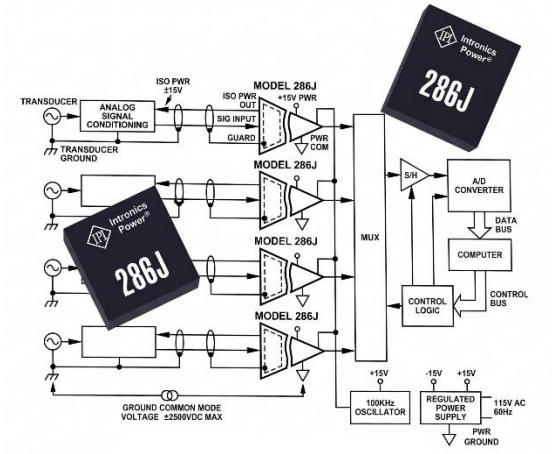

WHERE TO USE THE MODEL 289

Industrial Applications: In data acquisition systems, computer interface systems, process signal isolators and high CMV instrumentation, models 284J, 286J offer complete galvanic isolation and protection against damage from transients and fault voltages. High level transducer interface capability is afforded with model 286J's 20V pk-pk or model 284J's 10V pk-pk input signal range at a gain of 1V/V operation. In portable field designs, single supply, wide range operation (+8V to +16V) offers simple battery operation.

Medical Applications: In biomedical and patient monitoring equipment such as multi-channel VCG, ECG, and polygraph recorders, models 284J, 286J offer protection from lethal ground fault currents as well as 5kV defibrillator pulse inputs. Low level bioelectric signal recording is achieved with low input noise (8µV pk-pk @ G = max gain) and high CMR (110dB, min @ 60Hz).

DESIGN FEATURES AND USER BENEFITS

High Reliability: Models 284J, 286J are conservatively designed, compact modules, capable of reliable operation in harsh environments. Models 284J, 286J have calculated MTBF of over 390,000 hours and are designed to meet MIL-STD-202E environmental testing as well as the IEEE Standard for Transient Voltage Protection (472-1974: Surge Withstand Capability).

Isolated Power Supply: Dual regulated supplies, completely isolated from the input power terminals (±2500V dc isolation), provides the capability to excite floating signal conditioners, front end buffer amplifiers as well as remote transducers such as thermistors or bridges.

Adjustable Gain: A single external resistor enables gain adjustment from 1V/V to 100V/V (286J) or 1V/V to 10V/V (284J) providing the flexibility of applying models 284J, 286J in both high-level transducer interfacing as well as low-level sensor measurements.

600 Weaver Park Rd Longmont, CO 80501
PHONE: 781-551-5500 FAX: 781-551-5555

MODEL	284J	286J[1]
GAIN (NON-INVERTING)		
Range (50kΩ Load)	1 to 10 V/V	1 to 100 V/V
Formula	Gain = 1 + 100kΩ / (10.7kΩ + R_i[kΩ])	Gain = 1 + 100kΩ / (1kΩ + R_i[kΩ])
Deviation from Formula	±3%	±4%
vs. Time	±0.001%/1000 Hours	•
vs. Temperature (0 to +70°C)[2]	±0.0075%/°C	•
Nonlinearity, 10V pk-pk Output[2]	±0.05%	•
INPUT VOLTAGE RATINGS		
Linear Differential Range, G = 1 V/V	±5V min	±10V min
Max Safe Differential Input		
Continuous	240V rms	•
Pulse, 10ms duration, 1 pulse/10 sec[3]	±6500V pk max	•
Max CMV, Inputs to Outputs		
AC, 60Hz, 1 minute duration	2500V rms	•
Pulse, 10ms duration, 1 pulse/10 sec[3]	±2500V pk max	•
With 510kΩ in series with Guard	±5000V pk max	•
Continuous, AC or DC	±2500V pk	•
CMR, Inputs to Outputs, 60Hz, R_s ≤ 5kΩ		
Balanced Source Impedance	114dB	•
5kΩ Source Impedance Imbalance	110dB min	•
CMR, Inputs to Guard, 60Hz		
1kΩ Source Impedance Imbalance	78dB	•
Max Leakage Current, Inputs to Power Common		
@ 115VAC, 60Hz	2.0µA rms max	2.5µA rms max
INPUT IMPEDANCE		
Differential	10^8Ω ‖ 70pF	10^8Ω ‖ 150pF
Overload	300kΩ	•
Common Mode	5×10^{10}Ω ‖ 20pF	•
INPUT DIFFERENCE CURRENT		
Initial, @ +25°C	±7nA max	•
vs. Temperature (0 to +70°C)	±0.1nA/°C	•
INPUT NOISE		
Voltage[4]		
0.05Hz to 100Hz	8µV pk-pk	•
10Hz to 1kHz	10µV rms	3µV rms
Current		
0.05Hz to 100Hz	5pA pk-pk	•
FREQUENCY RESPONSE		
Small Signal, -3dB	1kHz	•
Slew Rate	25mV/µs	•
Full Power, 10V p-p Output	200Hz	900Hz
Full Power, 20V p-p Output	N/A	400Hz
Recovery Time, to ±100µV after Application		
of ±6500V pk Differential Input Pulse[3]	200ms	•
OFFSET VOLTAGE REFERRED TO INPUT		
Initial, @ +25°C, Adjustable to Zero	±(5 + 20/G)mV	±(5 + 45/G)mV
vs. Temperature (0 to +70°C)	±(1 + 150/G)µV/°C	±(7 + 250/G)µV/°C
vs. Supply Voltage	±1mV/%	•
RATED OUTPUT		
Voltage, 50kΩ Load	±5V min	±10V min
Output Impedance	1kΩ	•
Output Ripple, 1MHz Bandwidth	5mV pk-pk	20mV pk-pk
ISOLATED POWER OUTPUTS		
Voltage, ±5mA Load	±8.5V dc	±15V dc
Accuracy	±5%	0, -6%
Current	±5mA min	±15mA min
Regulation, No Load to Full Load	+0, -15%	+0, -10%
Ripple, 100kHz Bandwidth	100mV pk-pk	200mV pk-pk
POWER SUPPLY, SINGLE POLARITY[5]		
Voltage, Rated Performance	+15V dc	•
Voltage Operating	+(8 to 15.5)V dc	•
Current, Quiescent	+10mA	+13mA
TEMPERATURE RANGE		
Rated Performance	0 to +70°C	•
Operating	-25°C to +85°C	•
Storage	-55°C to +85°C	•
CASE DIMENSIONS[6]	1.5″ × 1.5″ × 0.62″	•

NOTES

• Specifications same as model 284J.

[1] Specifications for model 286J apply when driven by ADI model 281 oscillator.

[2] Gain temperature drift and gain nonlinearity are specified as a percentage of output signal level.

[3] Rise time of pulse must be >10µs.

[4] Model 284J: Gain = 10V/V. Model 286J: Gain = 100V/V.

[5] Recommended power supply, ADI model 904, ±15V @ 50mA.

[6] Recommended mounting sockets — model 284J: ADI Part Number AC1049; model 286J: ADI Part Number AC1054.

Specifications subject to change without notice.

OUTLINE DIMENSIONS

Dimensions shown in inches and(mm).

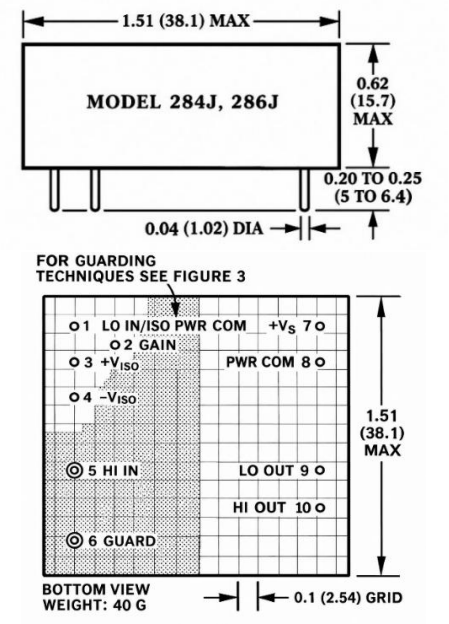

Model 284J

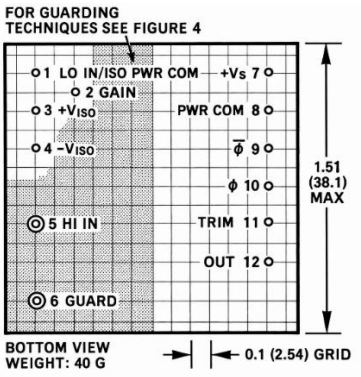

Model 286J

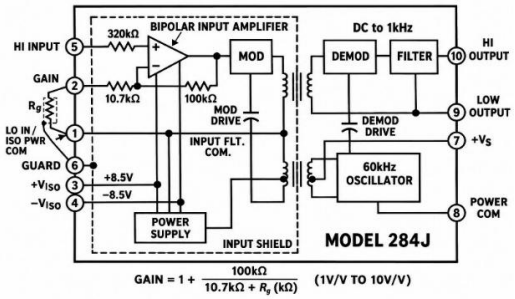

Figure 1. Block Diagram – Model 284J

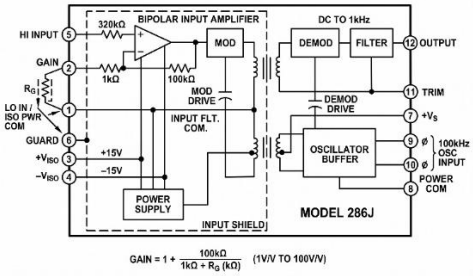

Figure 2. Block Diagram – Model 286J

INTERCONNECTION AND GUARDING TECHNIQUES

Models 284J, 286J can be applied directly to achieve rated performance as shown in Figures 3 and 4. To preserve the high CMR performance, care must be taken to keep the capacitance balanced about the input terminals. A shield should be provided on the printed circuit board under model 284J or 286J. The GUARD (Pin 6) should be connected to this shield. The guard-shield is provided with the mounting socket. To reduce effective cable capacitance, cable shield should be connected to the common mode signal source by connecting the shield as close as possible to the signal low.

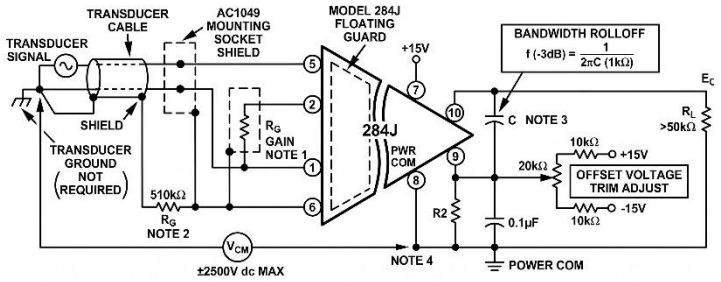

Note 1. gain resistor, R_i, 1%, 50ppm/°c metal film type is recommended. for gain = 1v/v, leave terminal 2 open. for gain = 10v/v, short terminal 2 to terminal 1

$$\text{gain} = 1 + \frac{100\text{k}\omega}{10.7\text{k}\omega + R_i(\text{k}\omega)}$$

Note 2. guard resistor, R_G, required only for cmv > $\pm 2500 v_{pk}$ ($\pm 5 kv_{pk}$ max). R_G may be mounted on ac1049 mounting socket using standoff provided. (use 1/4 watt, 5%, carbon composition type; allen bradley recommended).

Note 3. output filter capacitor, c, select to rolloff noise and output ripple; (e.g. select c = 1.5μf for dc to 100hz bandwidth).

Note 4. r2 ~ 200ω, g = 1; r2 ~ 2kω, g > 1

Figure 3. Model 284J Basic Isolator Interconnection

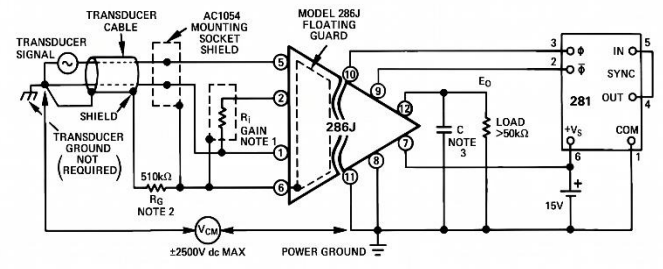

Note 1. gain resistor, R_i, use 50ppm/°c, metal film type. for gain = 1v/v, leave terminal 2 open. for gain = 100v/v, short terminal 2 to terminal 1 for gains from 1v/v to 100v/v:

$$\text{gain} = 1 + \frac{100\text{k}\omega}{1\text{k}\omega + R_i(\text{k}\omega)}$$

Note 2. optional guard resistor, R_G, required only for cmv > $\pm 2500 v_{pk}$ R_G may be conveniently mounted on ac1054 mounting socket using the standoff provided (R_G). use 1/4 watt, 5% carbon composition type; (allen bradley recommended).

Note 3. output filter capacitor c. select to roll-off noise and output ripple: (e.g. select c=1.5μf for dc to 100hz bandwidth)

$$F(-3\text{db}) = \frac{1}{2\pi C(1\text{k}\omega)}$$

Figure 4. Model 286J Basic Isolator Interconnection

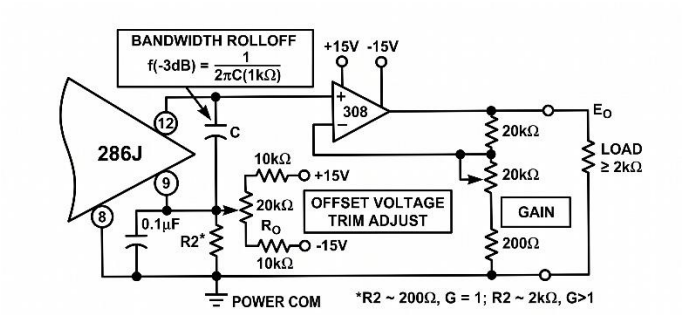

Figure 5. Model 286J Optional Connection: Offset Voltage Trim Adjust Bandwidth (-3dB) Rollof and Gain Adjust (G>100V/V)

Offset Voltage Trim Adjust: The trim adjust circuits shown in Figures 3 and 5 can be used to zero the output offset voltage over the specified gain range. The output terminals, HI OUT and LO OUT, can be floated with respect to PWR COM up to $\pm 50 V_{pk}$ max, offering three-port isolation. A 0.1μF capacitor is required from LO OUT to PWR COM whenever the output terminals are floated with respect to PWR COM. LO OUT can be connected directly to PWR COM when output offset trimming is not required.

INTERELECTRODE CAPACITANCE, TERMINAL RATINGS AND LEAKAGE CURRENTS LIMITS

Capacitance: Interelectrode terminal capacitance arising from stray coupling capacitance effects between the input terminals and the signal output terminals are each shunted by leakage resistance values exceeding 50kMΩ. Figures 6 and 8 illustrate the CMR ratings at 60Hz and 5kΩ source imbalance between signal input/output terminals, along with their respective capacitance.

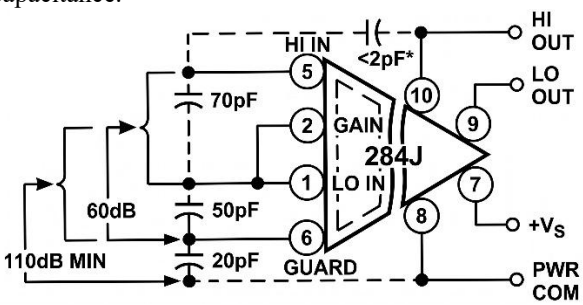

Figure 6. Model 284J Terminal Capacitance and CMR Ratings

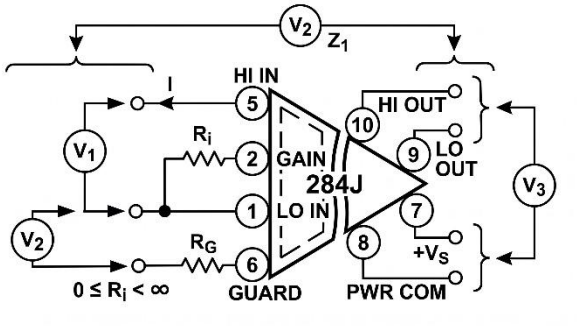

Figure 7. Model 284J Terminal ratings

Terminal Ratings: CMV performance is given in both peak pulse and continuous ac or dc peak ratings. Pulse ratings are intended to support defibrillator and other transient voltages. Continuous peak ratings apply from dc up to the normal full power response frequencies. Figures 7 and 9 and Table I illustrate models 284J, 286J ratings between terminals.

SYMBOL	RATING	REMARKS
V1 (pulse)*	±6500V_{PK} (10ms)	Withstand Voltage, Defibrillator
V1 (cont.)	±240V_{RMS}	Withstand Voltage, Steady State
V2 (pulse)*	±2500V_{PK} (10ms) R_G = 0	Transient
V2 (pulse)*	±5000V_{PK} (10ms) R_G = 510kΩ	Isolation, Defibrillator
V2 (cont.)	±2500V_{PK}	Isolation, Steady State
V3 (cont.)	±50V_{PK}	Isolation, dc
Z1	50kMΩ || 20pF	Isolation Impedance
I (286J)	50µA rms	Input Fault Limit, dc to 200kHz
I (284J)	35µA rms	Input Fault Limit, dc to 60kHz

*Rise time of pulse must be >10µs.

Table I. Isolation Ratings Between Terminals.

Leakage Current Limits: The low coupling capacitance between inputs and output yields a ground leakage current of less than 2.0µA rms (284J) and 2.5µA rms (286J) at 115V ac, 60Hz (or 0.02µA/V ac). As shown in Figures 10 and 11, the transformer coupled modulator signal, through stray coupling, also creates an internally generated leakage current. Line frequency leakage current levels are unaffected by the power on or off condition of models 284J, 286J.

For medical applications, models 284J and 286J are designed to improve on patient safety current limits proposed by F.D.A., U.L., A.A.M.I. and other regulatory agencies (e.g., model 286J complies with leakage requirements for the Underwriters Laboratory STANDARD FOR SAFETY, MEDICAL AND DENTAL EQUIPMENT as established under UL544 for type A and B patient connected equipment – reference Leakage Current, paragraph 27.5).

In patient monitoring equipment, such as ECG recorders, models 284J, 286J will provide adequate isolation without exposing the patient to potentially lethal microshock hazards. Using passive components for input protection, this design limits input fault currents even under amplifier failure conditions.

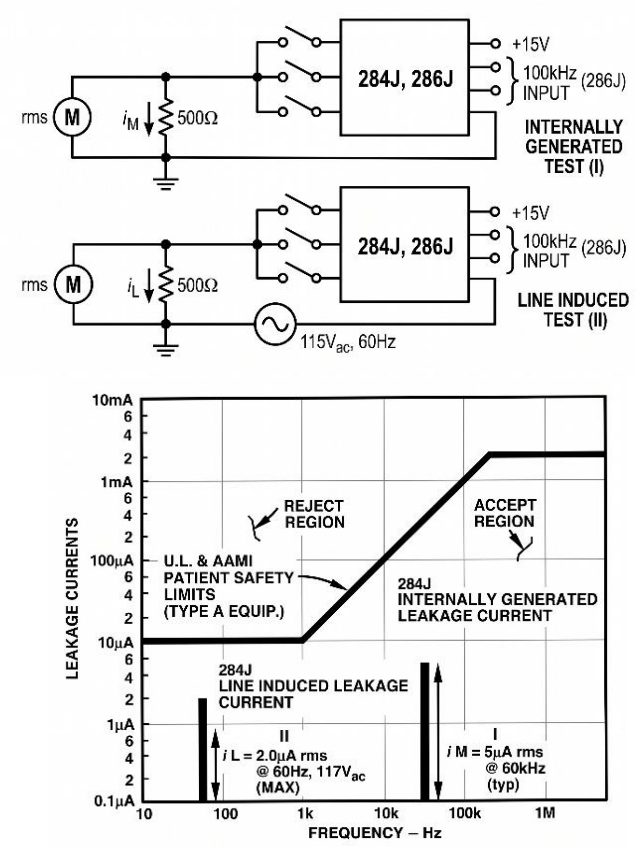

Figure 10. Model 284J Leakage Current Performance from Line Induced and Internally Generated (Modulator) Operating Conditions

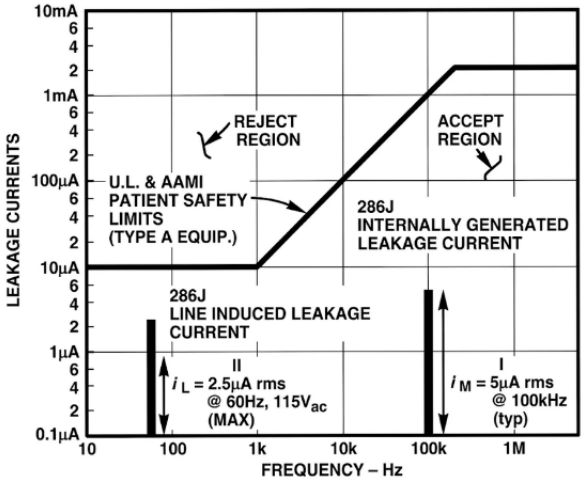

Figure 11. Model 284J Leakage Current Performance from Line Induced and Internally Generated (Modulator) Operating Conditions

GAIN AND OFFSET TRIM PROCEDURE, MODEL 284J

1. Apply $e_{IN} = 0$ volts and adjust R_O for $e_O = 0$ volts.
2. Apply $e_{IN} = +1.000$V dc and adjust R_G for $e_O = +5.000$V dc.
3. Apply $e_{IN} = -1.000$V dc and measure the output error (see curve a).
4. Adjust R_G until the output error is one half that measured in step 3 (see curve b).
5. Apply $e_{IN} = +1.000$V dc and adjust R_O until the output error is one half that measured in step 4 (see curve c).

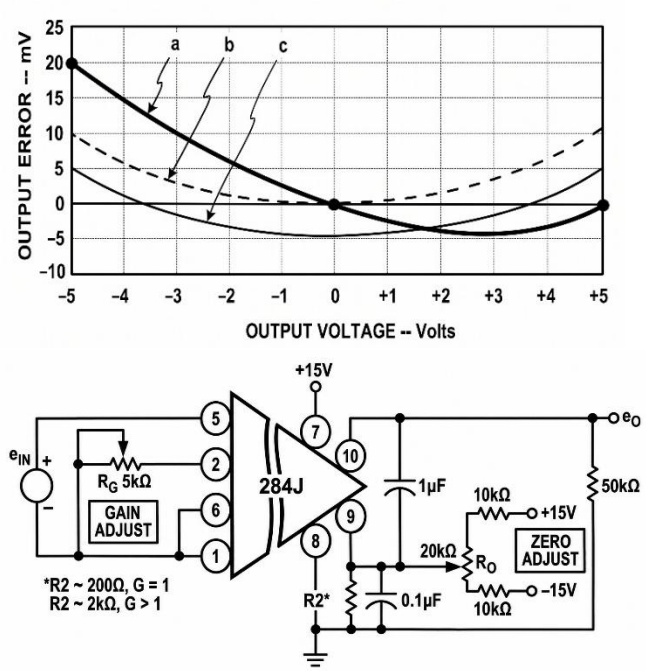

Figure 12. Gain and Offset Adjustment

GAIN AND OFFSET TRIM PROCEDURE, MODEL 286J

In applying the isolation amplifier, highest accuracy is achieved by adjustment of gain and offset voltage to minimize the peak error encountered over the selected output voltage span. The following procedure illustrates a calibration technique which can be used to minimize output error. In this example, the output span is +5V to -5V and operation at Gain = 10V/V is desired.

1. Apply $e_{IN} = 0$ volts and adjust R_O for $e_O = 0$ volts.
2. Apply $e_{IN} = +0.500$V dc and adjust R_G for $e_O = +5.000$V dc.
3. Apply $e_{IN} = -0.500$V dc and measure the output error (see curve a).
4. Adjust R_G until the output error is one half that measured in step 3 (see curve b).
5. Adjust R_G until the output error is one half that measured in step 3 (see curve b).

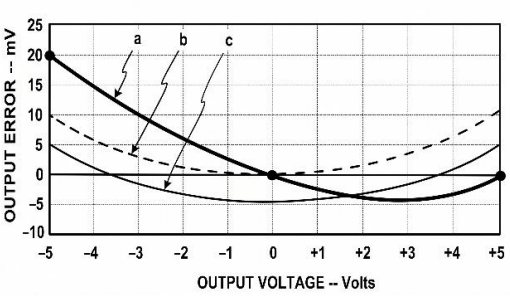

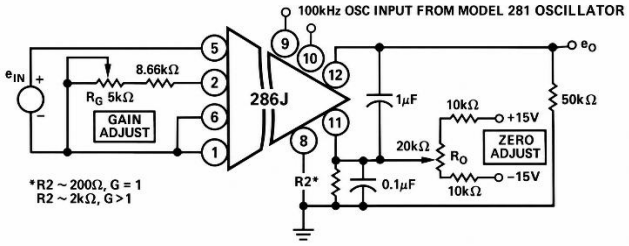

Figure 13. Gain and Offset Adjustment

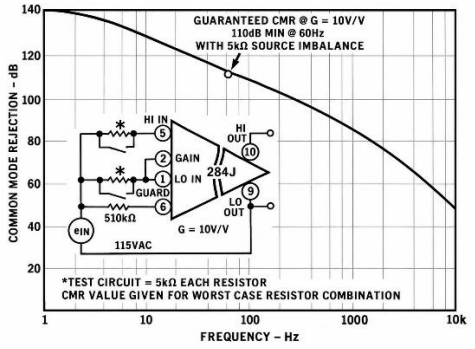

Figure 14. Model 284J Common Mode Rejection vs. Frequency

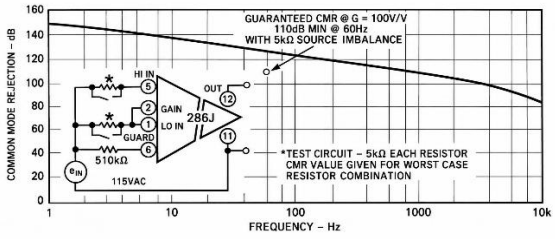

Figure 15. Model 286J Common Mode Rejection vs. Frequency

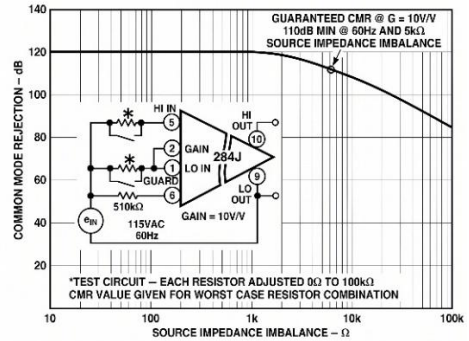

Figure 16. Model 284J Common Mode Rejection vs. Impedance Imbalance

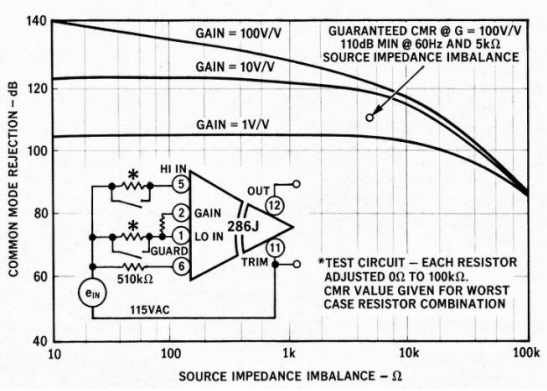

Figure 17. Model 286J Common Mode Rejection vs. Source Impedance Imbalance

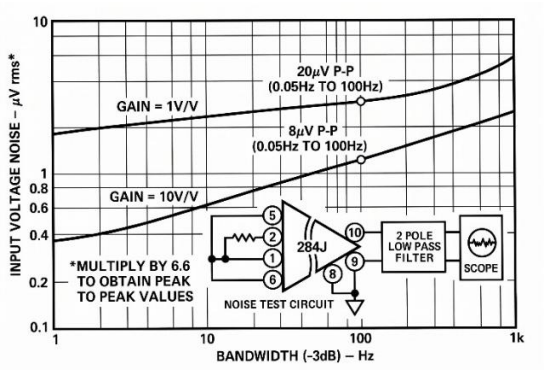

Figure 18. Model 284J Input Voltage Noise vs Bandwidth

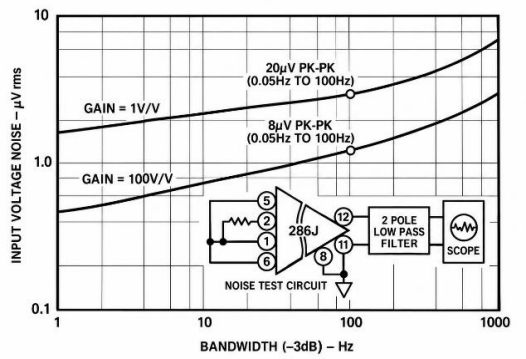

Figure 19. Model 286J Input Voltage Noise vs Bandwidth

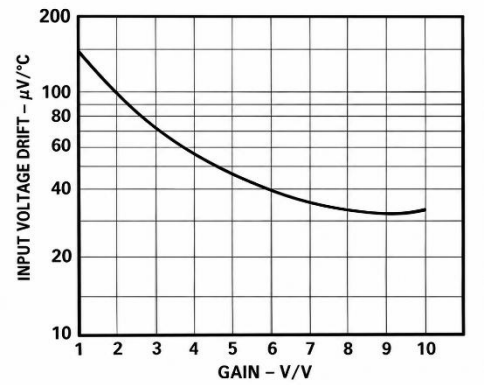

Figure 20. Model 284J Input Offset Voltage Drift vs Gain

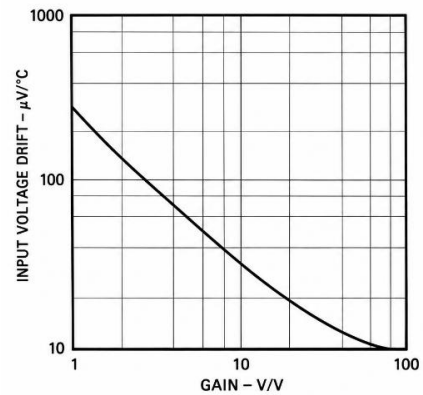

Figure 21. Model 286J Input Offset Voltage Drift vs Gain

Applying the Multi-Channel Isolation Amplifier

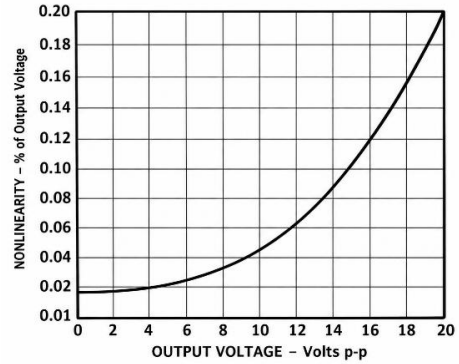

Figure 22. Model 286J Gain Nonlinearity vs Voltage

REFERENCE EXCITATION OSCILLATOR*

When applying model 286J, the user has the option of building a low cost 100kHz excitation oscillator, as shown in Figure 23, or purchasing a module from Analog Devices model 281.

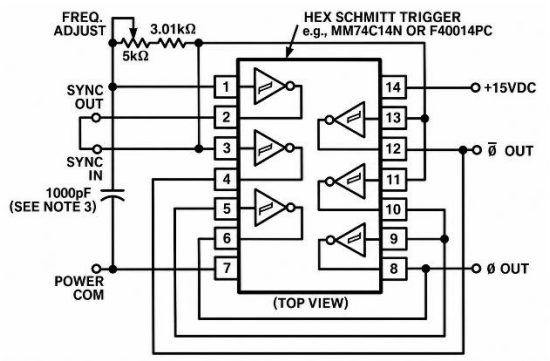

NOTES:

1. **FREQ. ADJUST: ADJUST TRIM POT FOR OUTPUT FREQUENCY OF 100kHz ±5%.**
2. **FOR SLAVE OPERATION, REMOVE JUMPER FROM SYNC OUT AND SYNC IN PINS.**
3. **USE CERAMIC CAPACITOR, "C0G" OR "NP0" CHARACTERISTIC.**

Figure 23. Model 281 100KHz Oscillator – Logic and Interconnection Diagram

The block diagram of model 281 is shown in Figure 24. An internal +12V dc regulator is provided to permit the user the option of operating over two, pin selectable, power input ranges; terminal 6 offers a range zof +14V dc to +28V dc; terminal 7 offers an input range of +8V dc to +14V dc.

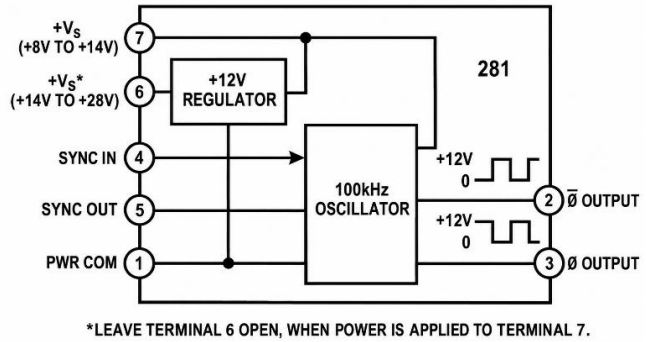

Figure 24. Model 281 Block Diagram

Model 281 oscillator is capable of driving up to 16 model 286Js as shown in Figure 25. An additional model 281 may be driven in a slave-mode, as shown in Figure 26 to expand the total system channels from 16 to 32. By adding additional model 281's in this manner, systems of over 1000 channels may be easily configured.

***CAUTION:**

ESD(Electro-static-discharge) sensitive device. Permanent damage may occur on unconnected devices subjected to high-energy electrostatic fields. Unused devices must be stored in conductive foam or shunts. The protective foam should be discharged to the destination socket before devices are removed.



EXTERNAL OSCILLATOR INTERCONNECTION

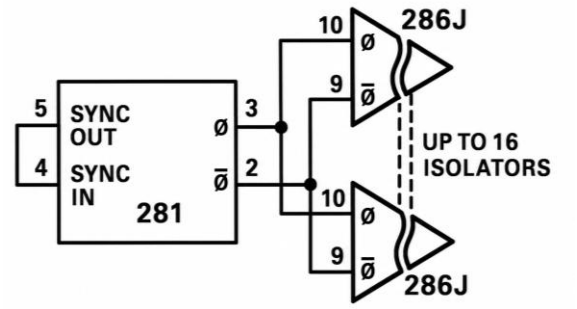

Figure 25. Model 281/286 Connection for Driving from 1 to 16 Isolators

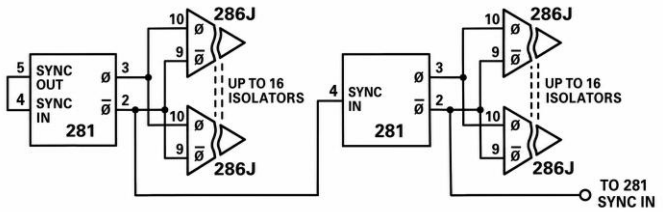

Figure 26. Model 281/286 Connection for Driving > 16 Isolators

SPECIFICATIONS

(typical @ +25°C and V_S = +15V dc unless otherwise noted)

MODEL	**281***
OUTPUT	
Frequency	100kHz ±5%
Waveform	Squarewave
Voltage (φ and $\overline{\varphi}$ terminals)	0 to +12V pk
Fan-Out[1,2]	16 max
POWER SUPPLY RANGE[3]	
High Input, Pin 6	+(14 to 28)V dc
Quiescent Current, N.L.	+5mA
F.L.	+16mA
Low Input, Pin 7	+(8 to 14)V dc
Quiescent Current, N.L.	+12mA
F.L.	+33mA
TEMPERATURE	
Rated Performance	0 to +70°C
Storage	-55°C to +85°C
MECHANICAL	
Case Size	1.4" x 0.6" x 0.49"
Weight	10 grams

NOTES

[1] Model 286J oscillator drive input represents unity oscillator load.

[2] For applications requiring more than 16 286Js, additional 281s may be used in a master/slave mode. Refer to Figure 26.

[3] Full load consists of 16 model 286Js and 281 oscillator slave.

Specifications subject to change without notice.

OUTLINE DIMENSIONS

Dimensions shown in inches and(mm).

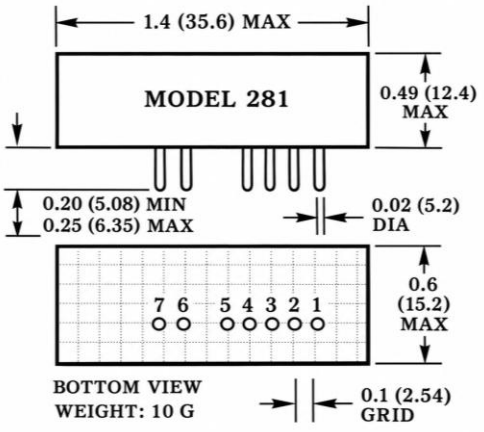

PIN TERMINAL IDENTIFICATION

1 POWER COMMON
2 Ø OUTPUT
3 Ø OUTPUT
4 SYNC INPUT
5 SYNC OUTPUT
6 +Vs: HIGH RANGE +(14 to 28)Vdc
7 +Vs: LOW RANGE +(8 to 14)Vdc

MATING SOCKET: Cinch #16 DIP or Equivalent