Precision, Wide Bandwidth, Synchronized Isolation Amplifier

MODEL 289

FEATURES

- Low Nonlinearity: ±0.012% max (289L)
- Frequency Response: (-3dB) dc to 20kHz (Full Power) dc to 5kHz
- Gain Adjustable 1 to 100V/V, Single Resistor
- 3-Port Isolation: ±2500V CMV Isolation Input/Output
- Low Gain Drift: ±0.005%/°C max
- Floating Power Output: ±15V @ ±5Ma
- 120dB CMR at 60Hz: Fully Shielded Input Stage
- Meets UL Std. 544 Leakage: 2µA rms max, @ 115V ac, 60Hz

APPLICATIONS

Multi-Channel Data Acquisition Systems
Current Shunt Measurements
Process Signal Isolator
High Voltage Instrumentation Amplifier
SCR Motor Control

GENERAL DESCRIPTION

Model 289 is a wide-band, accurate, low-cost isolation amplifier designed for instrumentation and industrial applications. Three accuracy selections are available offering guaranteed gain nonlinearity error at 10V p-p output: ±0.012% max (289L), ±0.025% max (289K), ±0.05% max (289J). All versions of the 289 provide a small signal frequency response from dc to 20kHz (-3dB) and a large signal response from dc to 5kHz (full power) at a gain of 1V/V. This new design offers true 3-port isolation, ±2500V dc between inputs and outputs (or power inputs), as well as 240V rms between power supply inputs and signal outputs. Using carrier modulation techniques with transformer isolation, model 289 interrupts ground loops and leakage paths and minimizes the effect of high voltage transients. It provides 120dB Common Mode Rejection between input and output common. The high CMV and CMR ratings of the model 289 facilitate accurate measurements in the presence of noisy electrical equipment such as motors and relays.

WHERE TO USE THE MODEL 289

The model 289 is designed to interface single and multichannel data acquisition systems with dc sensors such as thermocouples, strain gauges and other low-level signals in harsh industrial environments. Providing high accuracy with complete galvanic isolation, and protection from line transients or fault voltages, model 289's performance is suitable for applications such as process controllers, current loop receivers, weighing systems, high CMV instrumentation and computer interface systems.
Use the model 289 when data must be acquired from floating transducers in computerized process control systems. The photograph above shows a typical multichannel application allowing potential differences or interrupting ground loops, among transducers, or between transducers and local ground.

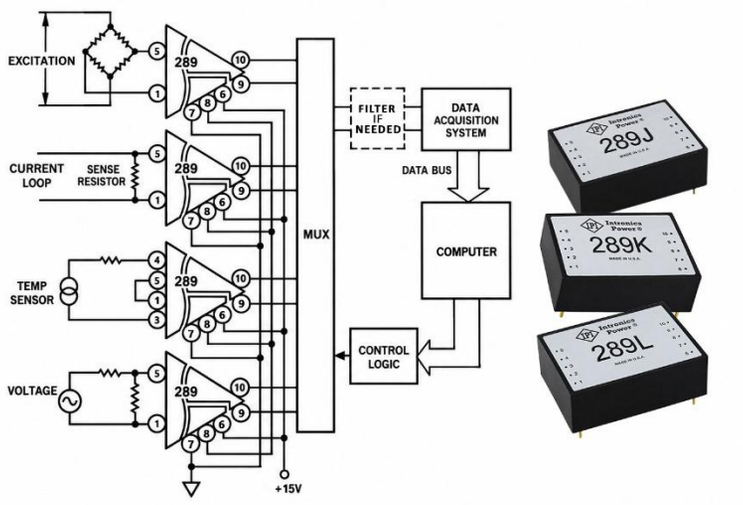

4 CHANNEL ISOLATED DATA ACQUISITION SYSTEM

DESIGN FEATURES AND USER BENEFITS

Isolated Power: The floating power supply section provides isolated ±15V outputs @ ±5mA. Isolated power is regulated to within ±5%. This feature permits model 289 to excite floating signal conditioners, front-end buffer amplifiers and remote transducers such as thermistors or bridges, eliminating the need for a separate isolated d` c/dc converter.
Adjustable Gain: A single external resistor adjusts the model 289's gain from 1V/V to 100V/V for applications in high and low level transducer interfacing.

Synchronized: The model 289 provides a synchronization terminal for use in multichannel applications. Connecting the synchronization terminals of model 289s synchronizes their internal oscillators, thereby eliminating the problem of oscillator "beat frequency" interference that sometimes occurs when isolation amplifiers are closely mounted.

Internal Voltage Regulator: Improves power supply rejection and helps prevent carrier oscillator spikes from being broadcast via the isolator power terminal to the rest of the system.

Buffered Output: Prevents gain errors when an isolation amplifier is followed by a resistive load of low impedance. Model 289 can drive a 2kΩ load.

Three-Port Isolation: Provides true galvanic isolation between input, output and power supply ports. Eliminates need for power supply and output ports being returned through a common terminal.

Reliability: Model 289 is conservatively designed to be capable of reliable operation in harsh environments. Model 289 has a calculated MTBF of 271,835 hours. In addition, the model 289 meets UL Std. 544 leakage, 2µA rms @ 115V ac, 60Hz.

600 Weaver Park Rd Longmont, CO 80501
PHONE: 781-551-5500 FAX: 781-551-5555

SPECIFICATIONS (typical @ +25°C and V_S = +14.4V to +25V dc unless otherwise noted)

Model	289J	289K	289L
GAIN (NONINVERTING)			
Range		1 to 100V/V	
Formula		$G = 1 + \frac{10k\Omega}{R_G\ (k\Omega)}$	
Deviation from Formula		±1.5% max	
vs. Temperature (0 to +70°C)[1]		15ppm/°C typ (50ppm/°C max)	
Nonlinearity, (±5V Swing)[2,3]	±0.05% max	±0.025% max	±0.012% max
INPUT VOLTAGE RATINGS			
Linear Differential Range (G = 1V/V)		±10V min	
Max Safe Differential Input			
Continuous		120V rms	
1 Minute		240V rms	
Max CMV (Inputs to Outputs)			
Continuous ac or dc		±2500V peak max	
ac, 60Hz, 1 Minute Duration		2500V rms	
CMR, Inputs to Outputs 60Hz			
$R_S \leq 1k\Omega$, Balanced Source Impedance		120dB	
$R_S \leq 1k\Omega$, HI IN Lead Only		104dB min	
Max Leakage Current, Input to Output @			
115V rms, 60Hz ac		2µA rms max	
INPUT IMPEDANCE			
Differential		$33pF \| 10^8\Omega$	
Overload		100kΩ	
Common Mode		$20pF \| 5 \times 10^{10}\Omega$	
INPUT DIFFERENCE CURRENT			
Initial @ +25°C		10nA (75nA max)	
vs. Temperature (0 to 70°C)		0.15nA/°C	
INPUT NOISE (GAIN = 100V/V)			
Voltage			
0.05Hz to 100Hz		8µV p-p	
10Hz to 1kHz		3µV rms	
Current			
0.05Hz to 100Hz		3pA rms	
FREQUENCY RESPONSE			
Small Signal -3dB			
G = 1V/V		20kHz	
G = 100V/V		5kHz	
Full Power, 10V p-p Output			
G = 1V/V		5kHz	
G = 100V/V		3.5kHz	
Full Power, 20V p-p Output			
G = 1V/V		2.3kHz	
G = 100V/V		2.3kHz	
Slew Rate		0.14V/µs	
Settling Time[4] ±0.05%, ±10V Step		400µs	
OFFSET VOLTAGE, REFERRED TO INPUT			
Initial, @ +25°C		$\pm 5 \pm \frac{10}{G}$ mV max	
vs. Temperature (0 to +70°C)	$\pm 20 \pm \frac{200}{G}$ max	$\pm 15 \pm \frac{100}{G}$ max	$\pm 10 \pm \frac{50}{G}$ µV/°C max
vs. Supply Voltage (+15V to +20V change)		$\pm 2 \pm \frac{10}{G}$ µV/V	
RATED OUTPUT			
Voltage, 2kΩ Load		±10V min	
Output Impedance		<1Ω(dc to 100Hz)	
Output Ripple, 0.1MHz Bandwidth			
No Signal IN		5mV p-p	
$+10V_{IN}$		50mV p-p	
ISOLATED POWER SUPPLY			
Voltage		±15V dc	
Accuracy		±10%	
Current		±5mA, min	
Regulation No Load to Full Load		±5%	
Ripple, 0.1MHz Bandwidth, No Load		25mV p-p	
Full Load		75mV p-p	
POWER SUPPLY, SINGLE POLARITY[5]			
Voltage, Rated Performance		+14.4V to +25V	
Voltage, Operating		+8.5V to +25V	
Current, Quiescent (@ V_S = +15V)		+25mA	
TEMPERATURE RANGE			
Rated Performance		0 to +70°C	
Operating		-15°C to +75°C	
Storage		-55°C to +85°C	
CASE DIMENSIONS		1.5" X 2.0" X 0.75"	

NOTES:
[1] Gain temperature drift is specified as a percentage of output signal level.
[2] Gain nonlinearity is specified as a percentage of 10V pk-pk output span.
[3] When isolated power output is used, nonlinearity increases by ±0.002%/mA of current drawn.
[4] G = 1V/V; with 2-pole, 5kHz output filter (see Figure 13).
[5] Recommended power supply, ADI model 904, ±15V @ 50mA output.
Specifications subject to change without notice.

OUTLINE DIMENSIONS

Dimensions shown in inches and (mm).

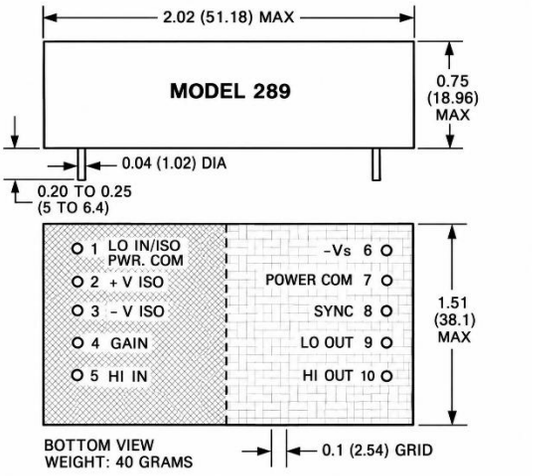

SHIELDED MATING SOCKET AC1214

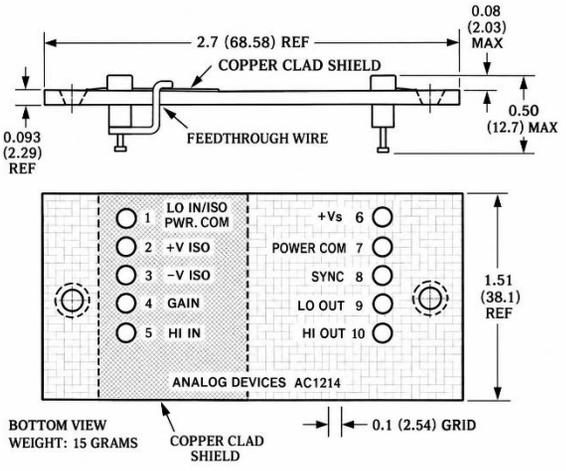

INTERCONNECTIONS AND SHIELDING TECHNIQUES

To preserve the high CMR performance of model 289, care must be taken to keep the capacitance balanced about the input terminals. A shield should be provided on the printed circuit board under model 289 as illustrated in the outline drawing above (screened area). The LO IN/ISO PWR COM (pin 1) must be connected to this field. This shield is provided with the mounting socket, model AC1214 (solder feedthrough wire to the socket pin 1 and copper foil surface). A recommended shielding technique using model AC1214 is illustrated in Figure 1.

Best CMR performance will be achieved by using twisted, shielded cable for the input signal to reduce inductive and capacitive pickup. To further reduce effective cable capacitance, the cable shield should be connected to the common mode signal source as close to signal low as possible (see Figure 1).

Understanding the Isolation Amplifier Performance

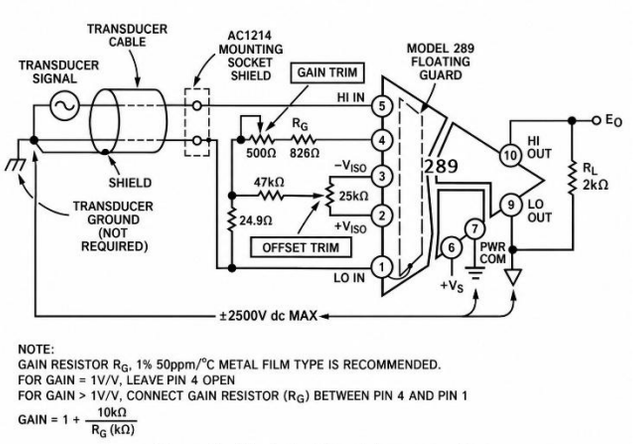

Figure 1. Basic Isolator Interconnection

THEORY OF OPERATION

The remarkable performance of the model 289 is derived from the carrier isolation technique used to transfer both signal and power between the amplifier's input stage and the rest of the circuitry. A block diagram is shown in Figure 2.

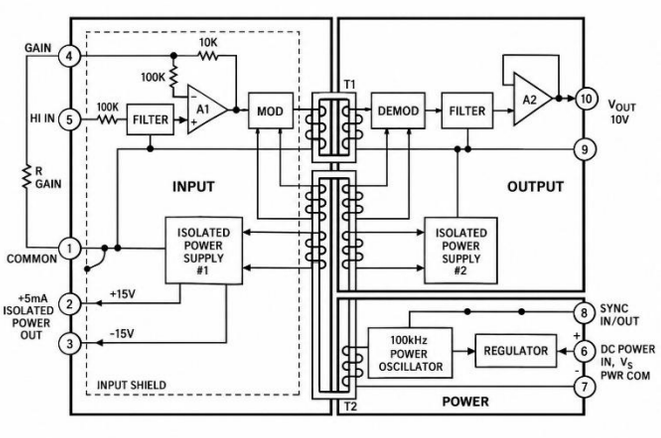

Figure 2. Model 289 Block Diagram

The input signal is filtered and appears at the input of the non-inverting amplifier, A1. This signal is amplified by A1, with its gain determined by the value of resistance connected externally between the gain terminal and the input common terminal. The output of A1 is modulated, carried across the isolation barrier by signal transformer T1, and demodulated. The demodulated voltage is filtered, amplified and buffered by amplifier A2, and applied to the output terminal. The voltage applied to the Vs terminal is set by the regulator to +12V which powers the 100kHz symmetrical square wave power oscillator. The oscillator drives the primary winding of transformer T2. The secondary windings of T2 energize both input and output power supplies and drives both the modulator and demodulator.

INTERELECTRODE CAPACITANCE AND TERMINAL RATINGS

Capacitance: Interelectrode terminal capacitance, arising from stray coupling capacitance effects between the input terminals and the signal output terminals, are each shunted by leakage resistance values exceeding 50GΩ. Figure 3 illustrates model 289's capacitance, between terminals.

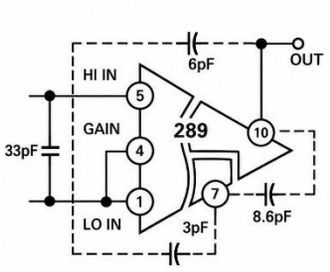

Figure 3. Model 289 Terminal Capacitance

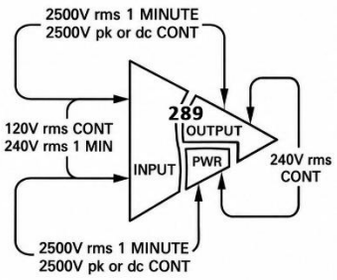

Figure 4. Model 289 Terminal Ratings

Terminal Ratings: CMV performance is given in both peak pulse and continuous ac, or dc peak ratings. Continuous peak ratings apply from dc up to the normal full power response frequencies. Figure 4 illustrates model 289 ratings between terminals.

GAIN AND OFFSET TRIM PROCEDURE

The following procedure illustrates a calibration technique which can be used to minimize output error. In this example, the output span is +5V to −5V and Gain = 10V/V.

1. Apply E_IN = 0 volts and adjust R_O for E_O = 0 volts.
2. Apply E_IN = +0.500V dc and adjust R_G for E_O = +5.000V dc.
3. Apply E_IN = −0.500V dc and measure the output error (see curve a).
4. Adjust R_G until the output error is one-half that measured in step 3 (see curve b).
5. Apply +0.500V dc and adjust R_O until the output error is one-half that measured in step 4 (see curve c).

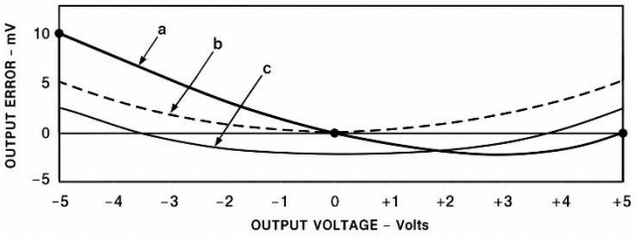

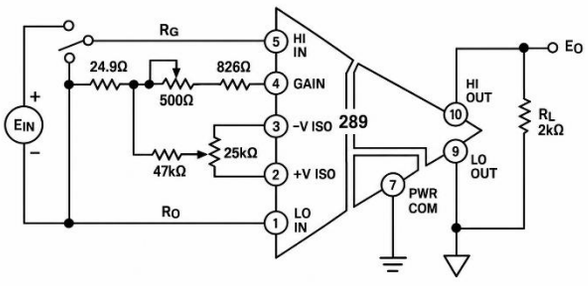

Figure 5a. Recommended Offset and Gain Adjustment for Gains > 1

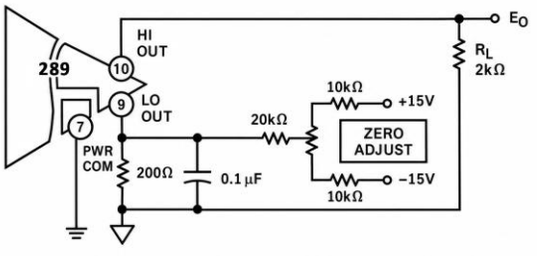

Figure 5b. Recommended Offset Adjustment for G = 1V/V

PERFORMANCE CHARACTERISTICS

Figure 6 shows the phase shift vs. frequency. The low phase shift and wide bandwidth of the model 289 make it suitable for use in SCR Motor Controller and other high frequency applications

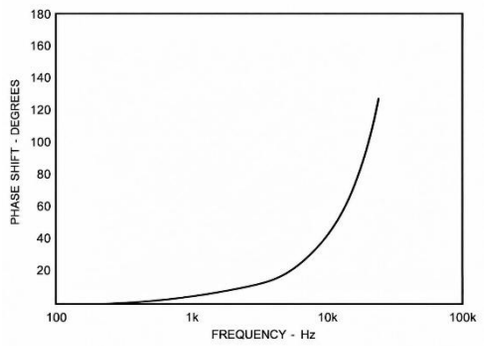

Figure 6. Typical 289 Phase vs. Frequency

Figure 7 illustrates the effect of source impedance imbalance on CMR performance at 60Hz for gains of 1V/V, 10V/V, and 100V/V. CMR is typically 120dB at 60Hz and a balanced source impedance. CMR is >60dB for source impedance imbalances up to 100kΩ.

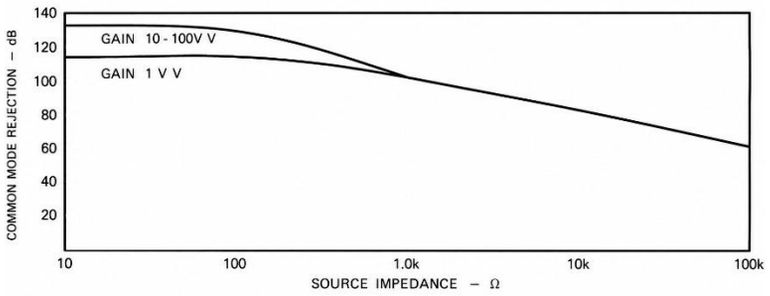

Figure 7. Typical 289 Common Mode Rejection vs. Source Impedance

Input Voltage Noise: Voltage noise, referred to input, is dependent on gain and bandwidth. Figure 8 shows rms voltage noise in a bandwidth from 0.05Hz to the frequency shown on the horizontal axis. The noise in a bandwidth from 0.05Hz to 100Hz is 8µV pk-pk at a gain of 100V/V. The peak-to-peak value is derived by multiplying the rms value at F = 100Hz (1.2µV rms) by 6.6.

For best noise performance in particular applications, a low pass filter at the output should be used to selectively roll-off noise and undesired signal frequencies beyond the bandwidth of interest. Increasing gain will also reduce the noise, referred to input.

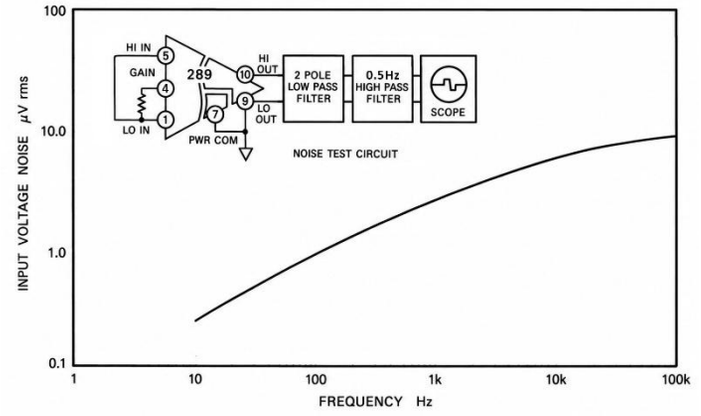

Figure 8. Typical Input Voltage Noise vs. Bandwidth

Gain Nonlinearity: Linearity error is defined as the deviation of the output voltage from the best straight line and is specified as a % peak-to-peak output voltage span; e.g., nonlinearity of model 289J operating at an output span of 10V pk-pk (±5V) is ±0.05% or ±5mV. Figure 9 illustrates gain nonlinearity for any output span to 20V pk-pk (±10V). Figure 10 shows the effect of gain vs. Gain nonlinearity.

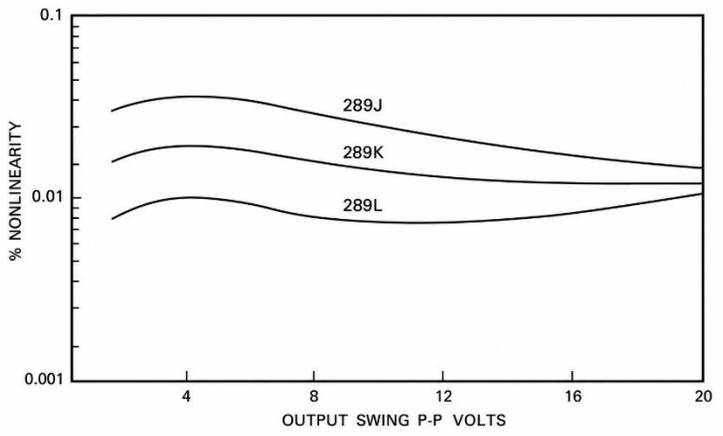

Figure 9. Typical Gain Nonlinearity vs. Output Swing

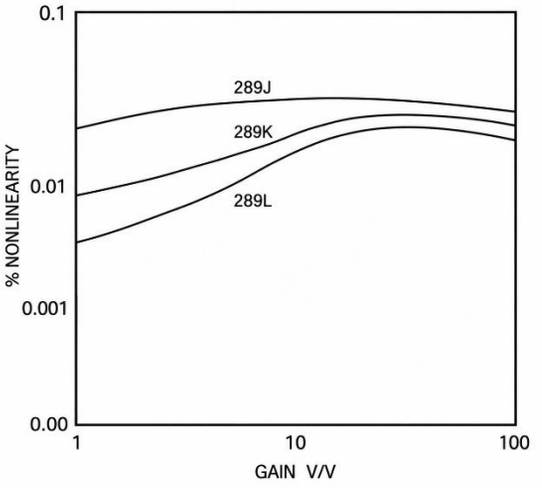

Figure 10. Typical Gain Nonlinearity vs. Gain.

Common Mode Rejection: Input-to-output CMR is dependent on source impedance imbalance, signal frequency and amplifier gain. CMR is rated at 115V ac, 60Hz and 1kΩ balanced source at a gain of 100V/V. Figure 11 illustrates CMR performance as a function of signal frequency. CMR approaches 156dB at dc with source imbalance as high as 1kΩ. As gain is decreased, CMR is reduced. At a gain of 1V/V, CMR is typically 6dB lower than at a gain of 100V/V.

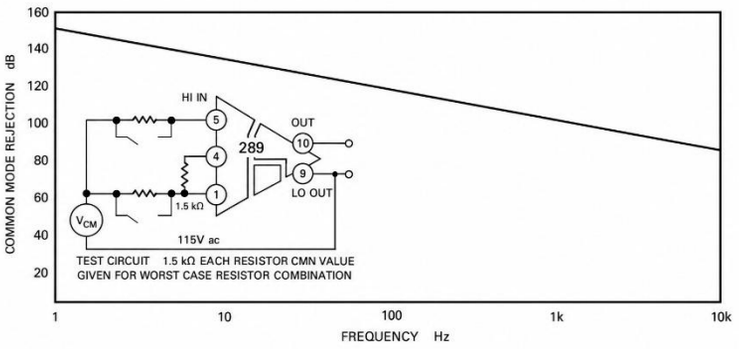

Figure 11. Typical Common Mode Rejection vs. Frequency

MULTICHANNEL APPLICATIONS

Isolation amplifiers containing internal oscillators may exhibit a slowly varying offset voltage at the output when used in multichannel applications. This offset voltage is the result of adjacent internal oscillators beating together. For example, if two adjacent isolation amplifiers have oscillator frequencies of 100.0kHz and 100.1kHz respectively, a portion of the difference frequency may appear as a slowly varying output offset voltage error. Model 289 eliminates this problem by offering synchronization terminal (pin 8). When this terminal is interconnected with other model 289 synchronization terminals, the units are synchronized. Alternately, one or more units may be synchronized to an external 100kHz ±2% square-wave generator by the connection of synchronization terminal(s) to that generator. The generator output should be 2.5V–5.0V p-p with 1kΩ source impedance to each unit. Use an external oscillator when you need to sync to an external 100kHz source, such as a sub-multiple of a microprocessor clock. A differential line driver, such as SN75158, can be used to drive large clusters of model 289. When using the synchronization pin, keep leads as short as possible and do not use shielded wire. These precautions are necessary to avoid capacitance from the synchronization terminal to other points. It should be noted that units synchronized must share the same power common to ensure a return path.

APPLICATIONS IN INDUSTRIAL MEASUREMENT AND CONTROL SYSTEMS

Isolated DAS: In data acquisition systems where multiple transducers are powered by a single supply and the magnitude of that supply is low enough for a multiplexer to handle the voltages on all the transducers, it is economical to multiplex ahead of an isolator. The fast settling time of the model 289 makes this configuration practical where slower isolators would not be usable.

Figure 12 shows an application where the difference in voltage between any two terminals of any of the transducers does not exceed 30 volts. Though the input of the model 289 is protected against line voltage, its power terminals are not; neither is the multiplexer so protected. This circuit will not, therefore, withstand the differential application of line voltage.

Multiplexer addressing is binary, an enable providing selection of the circuit shown as a signal source. Optical isolation is provided for digital signals. When several of these circuits are used for several groups of transducers, the model 289's should be synchronized.

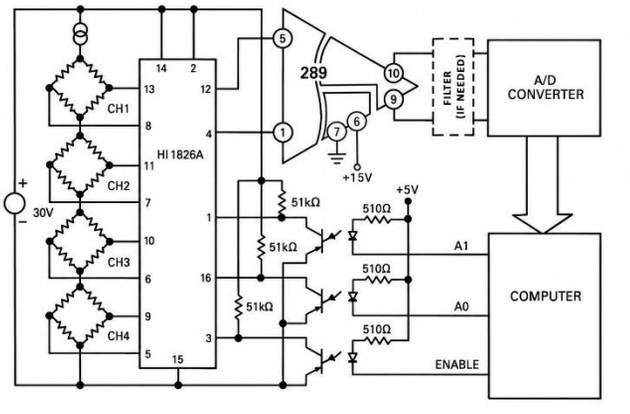

Figure 12. DAS with MUX Ahead of Isolator

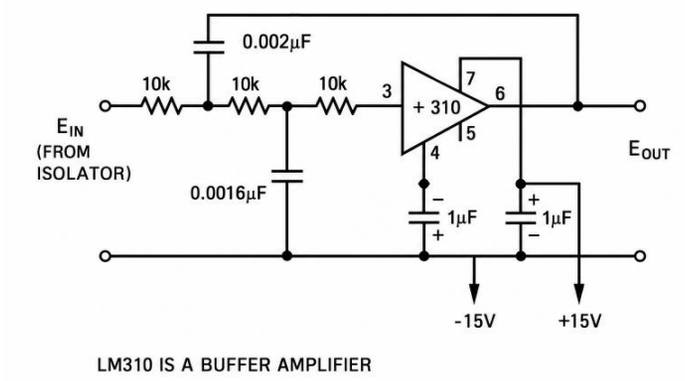

Figure 13. 2-Pole, 5kHz Active Filter

Noise Reduction in Data Acquisition Systems: Transformer coupled isolators must have a carrier to pass dc signals through their signal transformers. Inevitably some carrier frequency ripple passes through to the isolator output. As the bandwidth of an isolator becomes a larger fraction of its carrier frequency, this ripple becomes more difficult to control. Despite this difficulty, the model 289 produces very low ripple; therefore, additional filtration will usually be unnecessary. However, in some applications, particularly where a fast analog-to-digital converter is used following the isolator, it may be desirable to add filtration; otherwise, ripple may cause inaccurate conversions. The 2-pole low-pass shown in Figure 13 limits isolator bandwidth to 5kHz, which is the full power bandwidth of the model 289. Carrier ripple is much reduced. Another beneficial effect of an output filter is smoothing of discontinuous high frequency waveforms.

Motor Control and AC Load Control: Phase shift and bandwidth are important considerations for motor control and ac load control applications. The model 289 possesses sufficient bandwidth and acceptable phase shift for such tasks.

Figure 14 shows two model 289's sensing the armature voltage and current of a motor. Faithful replicas of the waveforms of these variables are applied to the motor control. A1 operates at unity gain from divided R1–R3 to deliver an output that is 1/100 of the armature voltage of the motor. A2 operates at a gain of 100V/V to deliver a voltage 100 times that developed across the current sensing shunt.

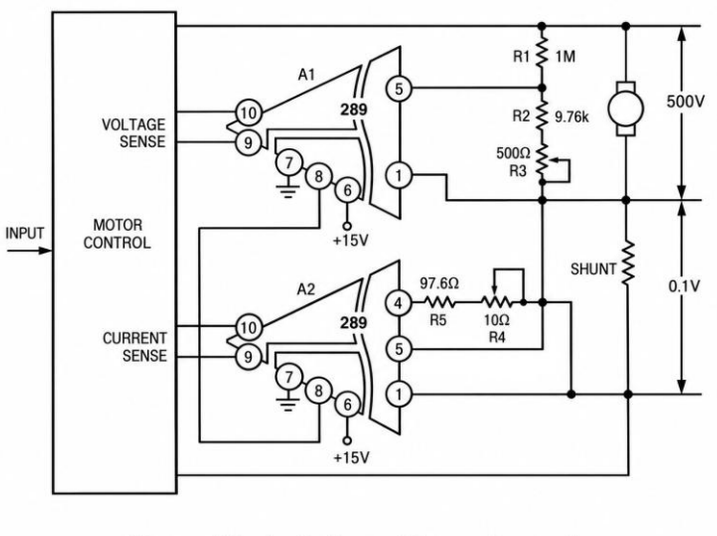

Figure 14. Isolating a Motor Controller

Figure 15 shows three model 289's sensing the voltages on the three phases of an ac load. The Y network shown divides the voltages of the three phases and creates a neutral for the input commons of the isolators. The output of each isolator is a faithful replica of the phase of the waveform it senses. The isolator outputs provide the feedback necessary for the trigger control to correctly fire the triacs. In other applications, the outputs of the isolators might have been fed to rms-to-dc converters.

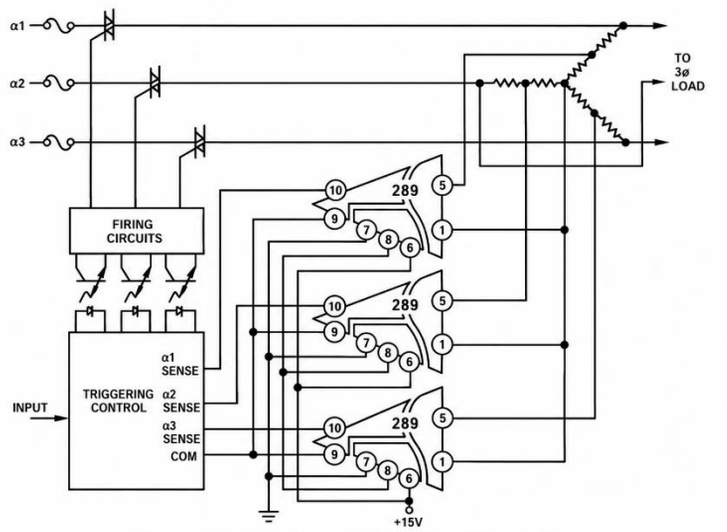

Figure 15. Isolating a 3 Phase Load Controller

Isolated DACs: Figure 16 shows a 12-bit DAC with ±5V isolated output. A buffered -5V reference voltage is provided to the DAC by A1a, A1b and associated circuitry. The digital input causes a proportion of DAC current to flow into OUT1 of the DAC. The remaining DAC current flows into OUT2. Current flowing into OUT1 causes positive voltage at the output of A1c. Current flowing into OUT2 causes a positive voltage at the output of A1d, which in turn causes a negative voltage at the output of A1c. Voltage appearing at the output of A1c is reproduced at the output of the model 289. R5 and R8 must be adjusted to produce less than 0.5mV at OUT1 and OUT2 of the DAC respectively. R15 may be used to adjust gain and R11 to adjust offset with the binary code 1000 0000 0000 to zero.

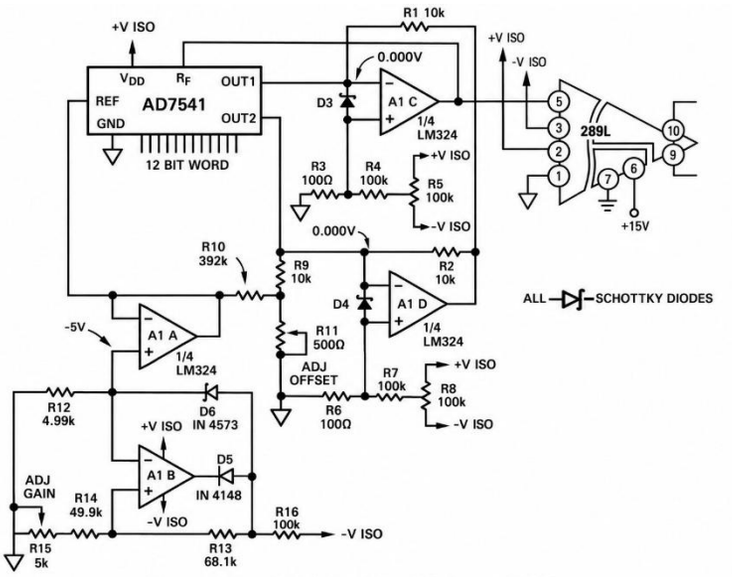

Figure 16. 12-Bit Isolated Voltage DAC

Figure 17 shows the model 289 providing an isolated 4-to-20mA output from a 12-bit DAC. A1a provides a -4V reference to the DAC. The digital input causes a portion of DAC current to flow into OUT1, causing a positive voltage at the output of A1d. A1b produces a voltage across R4 proportional to DAC current. A1c and associated circuitry sink a current which is one-fourth of the full scale current of the DAC, causing a positive voltage of 1 volt at the output of A1d. With the code 1111 1111 1111, +5 volts appears at the output of A1d. Operation is unipolar with a positive offset. The output voltage of A1d is reproduced at the output of the isolator, where the circuitry shown converts it into a 4-to-20mA current which may be applied to the load R_L.

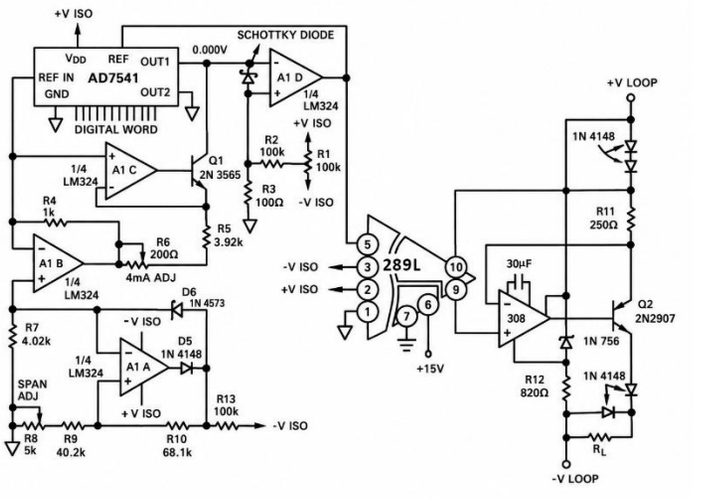

Figure 17. 12-Bit Isolated Process Current DAC

Temperature Measurement: Figure 18 shows the model 289 providing a ground-referred output in an application measuring the temperature of an object floating at a high common mode voltage. The AD590 temperature sensor sinks a current of -1µA/K. This current flows into the gain terminal of the model 289, developing +10mV/K across the internal feedback resistor. This voltage also appears at the output of the model 289.

The circuitry shown connected by a dotted line may be useful if an output of 10mV/°C is desired. A current of +273µA is sourced through the 8.66k resistor and the potentiometer cancelling the AD590 current at 0°C (273K), resulting in 0mV at the output at 0°C.

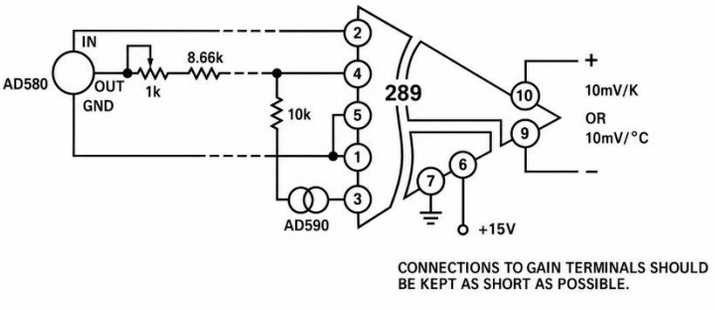

Figure 18. Isolated Temperature Measurement