Intronics Power®

Low Cost 3 Digit AC Line or Logic Powered DPM

AD2026

FEATURES

- Third Generation LSI Design
- Either Line Powered or Logic Powered
- Large 0.56" Red Orange LED Displays
- Balanced Differential Input/Floating
- 1000V Common Mode Voltage (CMV)
- Terminal Block Interface (AC Version)
- High Reliability: > 250,000 Hour MTBF
- Small Size and Weight
- Low Cost

GENERAL DESCRIPTION

The AD2026 is specifically designed to provide a digital alternative to analog panel meters. The AD2026 is available either logic powered (+5V DC) or AC line powered. Most of the analog and digital circuitry is implemented on a single I2L LSI chip, the AD2020. Only 13 additional components are required to complete the AD2026 +5V DC version. The entire DC version is mounted on a single 3” x 1 5/8” PCB. AC line power is achieved with the addition of a second PCB containing the AC power transformer and power supply circuitry. The AD2026, on both the AC line and logic powered versions, offers as a standard feature, 0.56” high LED displays. Brightness is enhanced on both versions due to the Red Orange lens. In addition to the Red Orange lens, the AD2026 is also available with a dark red lens for applications where maximum brightness is not required and minimum backlighting is desired.

A unique patented case design utilizes molded-in fingers, both to capture the PCB in the case and to provide snap-in mounting of the DPM in a standard panel cutout. No mounting hardware of any kind is used. The DC version occupies less than 1” of space behind the panel. The line powered version offers the same mounting features but occupies 2 ½” of behind panel space.

EXCELLENT PERFORMANCE

The AD2026 offers the instrument designer digital accuracy, resolution, and use of readout while occupying less space than its analog counterpart. Other features of analog meters, such as reliability and instantaneous response, are retained in the AD2026.

The AD2026 measures and displays inputs from –99 mV to +999 mV, with an accuracy of 0.1% of reading ± 1 digit. Zero shift is less than one bit over the full operating-temperature range, resulting in the same performance as a DPM with auto-zero. The balanced differential input of the DC-powered AD2026 rejects common-mode voltages up to 200 mV, enough to eliminate most ground-loop problems. The floating differential input inherent in the AC-line-powered version offers 1000 V of common-mode voltage rejection.

Covered by patent numbers: 4,092,698; 29,992; 3,872,466; and 3,887,863.

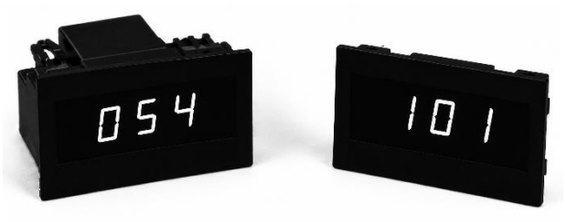

Optional 10.0 V full-scale (F.S.) range is available on the ac-line version that will accept inputs from –0.99 V to 9.99 V.

WIRING CONNECTIONS

For Balanced-Differential operation with the AD2026 dc version, connect the input as shown in Figure 1. The common-mode loop must provide a return path for the bias currents internal to the AD2026. The resistance of this path must be less than 100 kΩ, and total common-mode voltages must not exceed 200 mV.

For applications where attenuation is required, scaling resistors can be connected between pins 6 and 7 and between pins F and H. Pin 5 must be used as the High Analog Input when scaling resistors are used, and pin 4 when they are not. Pin E is the Analog Low Input.

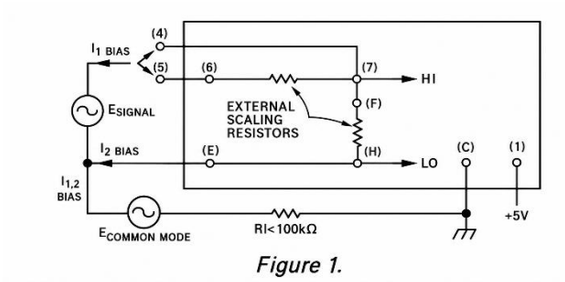

Figure 1.

Connection to the AC-line-powered AD2026 is via the terminal strip on the rear. AC line power is connected to terminals 4 and 5, and the signal input is connected to terminal 1 (Analog HI) and terminal 2 (Analog Ground).

600 Weaver Park Rd Longmont, CO 80501
PHONE: 781-551-5500 FAX: 781-551-5555

SPECIFICATIONS (typical at +25°C and nominal supply voltage unless otherwise noted)

DISPLAY OUTPUT

- Light emitting diode, planar seven-segment display readouts, 0.56" (14.6mm) high (orange)
- Overload Indication: EEE
- Negative Indication: -XX
- Negative Overload Indication: ~———
- Decimal Points: three (3) selectable at input connector (DC version); internally on AC version

ANALOG INPUT

- Configuration: balanced differential input (DC version), single-ended isolated (AC version)
- Full Scale Range: -99mV to +999mV, 0.99V to +9.99V (10V option on AC version)
- Automatic Polarity
- Input Impedance: 100MΩ; 100kΩ (10V option)
- Bias Current: 100nA
- Overvoltage Protection: +15V DC, sustained

ACCURACY

- ±0.1% +1 digit
- Resolution: 1mV or 10mV
- Temperature Range: -10°C to +60°C operating; -25°C to +80°C storage
- Temperature Coefficient: Gain: 50ppm/°C, Zero: 10uV/°C (essentially auto zero)
- Warm-Up Time to Rated Accuracy: Instantaneous
- Settling Time to Rated Accuracy: 0.3 second for full input voltage swing (DC version); 0.75 second for full input voltage swing (AC version)

COMMON MODE REJECTION

(1k source imbalance, DC to 1kHz)

- 50dB, +200mV common mode voltage (DC version)
- 116dB (96dB on 10V range); 1000V RMS max CMV (AC version)

NORMAL MODE REJECTION

- 30dB at 50-60Hz (AC version)

CONVERSION RATE

- 4 conversions per second
- Hold and read on command (DC version only)

CONTROL INPUTS

- **Display Blanking/Display Power Input (DC version only):** The display of the AD2026 can be blanked by removal of power to the display-power input, with no effect on the conversion circuitry. If external logic switching is used, the display requires 110 mA peak (85 mA average) when illuminated.
- **Hold (DC version only):** When the Hold input is at logic "0" (grounded or open circuit), the AD2026 will convert at 4 conversions per second. If a voltage of 0.6 V to 2.4 V is applied to this input, the DPM will stop converting and hold the last reading. A 12 kΩ resistor in series with this input to +5 V will provide the proper voltage. (Consult factory for "HOLD" on AC version.)

DECIMAL POINT

- To illuminate decimal points on the DC version, ground the appropriate pin (A, B, or 3).
- To illuminate decimal points on the AC version, remove the shroud and bridge the appropriate solder pad (A, B, or 3).

POWER INPUT LOGIC POWER[3]

- Converter: +5 V ± 5 %, 0.2 watts typ; 0.33 watts max
- Display: +5 V ± 40 %, 0.45 watts typ; 0.75 watts max

POWER INPUT AC LINE POWER

- AC line, 50–60 Hz, 1.5 watts

CALIBRATION ADJUSTMENTS

- Gain
- Zero
- Recommended recalibration interval: six months

SIZE[4]

- 3.43″ W × 2.0″ H × 0.85″ D (87 × 52 × 22 mm)
- 0.88″ (22 mm) overall depth to rear of connector
- Panel cutout required: 3.175 ± 0.015″ × 1.810 ± 0.015″ (80.65 ± 0.38 × 45.97 ± 0.38 mm)

WEIGHT

- 1.8 ounces (53 grams) (DC version)
- 7 ounces (198 grams) (AC version)

CONNECTIONS

A 10 pin T&B/Ansley 609-1000M with two feet of 10 conductor ribbon cable is available.
Conductor to pin A is color coded. Sequence of ribbon connections is A, 1, B, 2, C, 3, etc.
The AD2026 AC version is complete with terminal strip for easy interface.

ORDERING GUIDE

AD2026

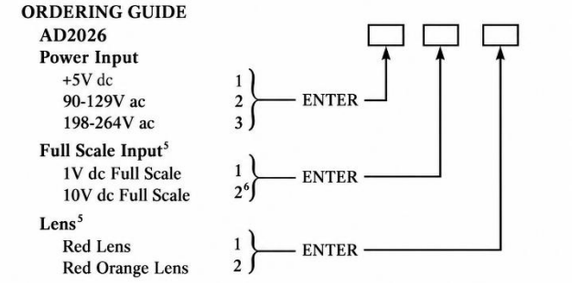

NOTES:

[1] Guaranteed at +25°C and nominal supply voltage.
[2] Guaranteed.
[3] When the same power supply is used to power both display and converter, +5V, ±5%, 0.65 watts typical, 0.9 watts max is required.
[4] Dimensions for ac line powered version: 3.43"W x 2.0"H x 2.44"D (87mm x 52mm x 63mm).
[5] No Charge Options. [6] 10V dc full scale option is available on ac power only.
Specifications subject to change without notice.

OUTLINE DIMENSIONS

Dimensions shown in inches and (mm)

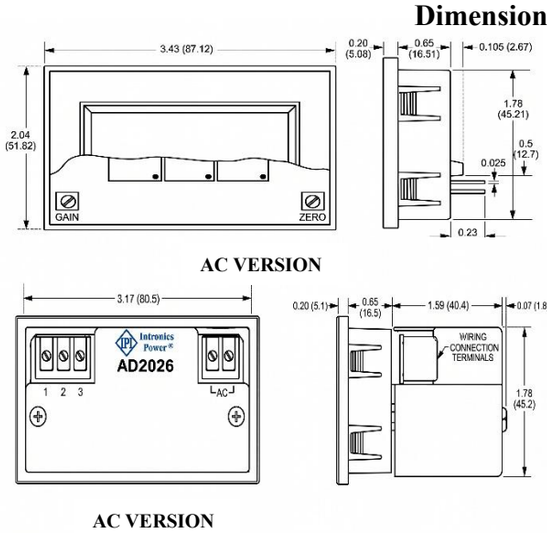

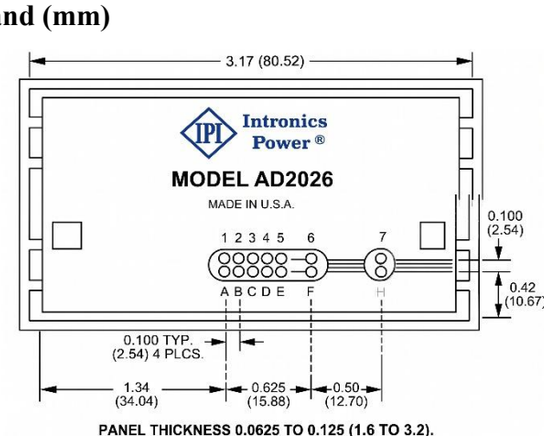

PIN CONNECTION

AC VERSION

PIN	FUNCTION
1	Input
2	Analog Ground
3	NC
4	AC HI
5	AC LO

DC VERSION

PIN	FUNCTION
1	+5V Power
2	+5V Display Power
3	Decimal Point X.XX
4	Input (When Scaling Resistors Not Used)
5*	Input (When Scaling Resistors Are Used)
6*	Series Arm of Scaling Resistor Divider
7*	Series Arm of Scaling Resistor Divider

PIN	FUNCTION
A	Decimal Point XX.X
B	Decimal Point XXX.
C	Power Ground
D	Hold
E	Analog Ground
F*	Shunt Arm of Scaling Resistor Divider
H*	Shunt Arm of Scaling Resistor Divider

***NOT NORMALLY USED, ALLOWS CONVENIENT MOUNTING OF SCALING RESISTORS.**