Low Cost 3½ Digit Logic Powered DPM With LED Displays

AD2021

FEATURES

- "Second Generation" MOS-LSI Design
- Large 0.5" (13mm) LED Displays
- +5VDC Logic Powered
- +-1.999V or +-199.9mV Full Scale Ranges
- Limited Differential Input
- Low Power Consumption: 1.45 Watts
- Small Size

APPLICATIONS

- General Purpose Logic Powered DPM Applications
- Portable Applications Requiring Low Power Consumption



GENERAL DESCRIPTION

The AD2021 is a low-cost, 3½ digit, +5 VDC logic-powered digital panel meter with large LED displays. While designed for general-purpose DPM applications, the small size, light weight, and low power consumption of the AD2021 make it an ideal digital readout for modern, compact instrument designs.

THE BENEFITS OF "SECOND GENERATION" DESIGN

The AD2021 is designed around MOS-LSI (Metal-oxide semiconductor, large scale integration) integrated circuits, which greatly reduce the number of components, and thereby the size, and reduce power consumption to 1.45 watts. Both the lower power consumption and fewer interconnections between components promise greatly increased reliability. The circuit design maintains the performance and features of earlier DPMs. Large 0.5-inch (13mm) LED displays offer the visual appeal of gas discharge displays with the ruggedness and lifetime of all solid-state devices.

EXCELLENT PERFORMANCE AND EASY APPLICATION

The AD2021 measures input voltage over a full scale range of ±1.99VDC or ±199.9mVDC ("S" option) with an accuracy of ±0.05% reading ±0.025% full scale ±1 digit. Using the "limited differential" input first used on Analog Devices' AD2010, the AD2021 prevents ground loop problems and provides 35 to 50dB of common mode rejection at common mode voltages up to +200mV. Normal mode rejection is 40dB at 50 to 60Hz. BCD data outputs are provided in a bit parallel, character serial format compatible to CMOS logic systems. For those applications requiring parallel BCD data, schemes for making the serial to parallel conversion are available. Controls to hold reading, set decimal points and blank the display are provided.

INDUSTRY STANDARD PACKAGING

The AD2021 is packaged in Analog Devices' logic-powered DPM case size, only 1.25 inches (32mm) deep. The small size of this DPM makes it easy to accommodate in any instrument design, and since several other manufacturers now use the same panel cutout for logic-powered DPMs, this industry standardization allows mechanical second sourcing. In addition, the AD2021 uses the same pin connections as the AD2010 (except in BCD outputs, of course) as a convenience to allow updating designs to take advantage of the second-generation design and larger display of the AD2021.

DESIGNED AND BUILT FOR RELIABILITY

Even beyond the reliability advantages of the LSI-IC design and LED displays, the AD2021 has had extreme care taken in its design and manufacture to ensure reliability. Manufacturing processes are monitored by continuous quality assurance inspections to ensure proper workmanship and testing. Automatic test equipment is used to test each DPM thoroughly and without error. And each AD2021 receives a full one-week failure-free burn-in before shipment.

600 Weaver Park Rd Longmont, CO 80501
PHONE: 781-551-5500 FAX: 781-551-5555

SPECIFICATIONS (typical at +25°C and nominal power voltage)

DISPLAY OUTPUT

- Light emitting diode, planar seven-segment display readouts, 0.5" (13mm) high for three data digits, 100% overrange and negative polarity indication. Overload indicated by flashing display, polarity remains valid
- Decimal points selectable at input connector
- Display blanking on three data digits (does not affect overrange digit, polarity sign of decimal points)

ANALOG INPUT

- Configuration: bipolar, limited differential
- Full Scale Range: ±1.999V or ±199.9mV ("S" option)
- Automatic Polarity
- Auto Zero
- Input Impedance: 100MΩ
- Bias Current: 50pA
- Overvoltage Protection: ±50VDC, sustained

ACCURACY

- ±0.05% reading ±0.025% full scale ±1 digit[1]
- Resolution: 1mV or 100uV ("S" option)
- Temperature Range[2]: 0 to +50°C operating; -25°C to +85°C storage
- Temperature Coefficient: Gain: 50ppm/°C, Zero: auto zero
- Warm-Up Time to Rated Accuracy: less than one minute
- Settling Time to Rated Accuracy: 0.4 second

NORMAL MODE REJECTION

- 40dB at 50—60Hz

COMMON MODE REJECTION

- AD2021: 35dB (DC -10kHz)
- AD2021/S: 50dB (DC -10kHz)

COMMON MODE VOLTAGE

- ±200mV

CONVERSION RATE

- 5 conversions per second
- Hold and read on command

CONTROL INPUTS

- Display Blanking: (TTL, DTL compatible, 2 TTL loads). Logic "0" or grounding blanks the three data digits only, not the decimal points, overrange digit (if on) and polarity sign. Logic "1" or open circuit for normal operation. Display blanking has no effect on output data and the display reading is valid immediately upon removal of a blanking signal.
- Hold: (CMOS, DTL, TTL compatible, 1LP TTL load). Logic "0" or grounding causes the DPM to cease conversions and display the data from the last conversion. Logic "1" or open circuit for normal operation. After the "Hold" input is removed, one to two conversions are needed before the reading is valid.
- Decimal Points: Grounding or Logic "0" will illuminate the desired decimal point. External drive circuitry must sink 25mA peak at a 25% duty cycle when the decimal points are illuminated.

DATA OUTPUTS (See Application Section for details on data outputs)

BCD Data Outputs: (CMOS, LP TTL or LP Schottky compatible), bit parallel, character serial format.
Digit Strobe Outputs: (CMOS, DTL, TTL compatible, one TTL load). Logic "1" on any of these lines indicates the output data is valid for that digit.
Polarity Output: (CMOS, TTL, DTL compatible, one TTL load). Logic "1" indicates positive polarity input, logic "0" indicates negative polarity.
Status: (CMOS or LP TTL compatible). When this signal is at Logic "1", the output data is valid.
Clock: (CMOS, DTL, TTL compatible, one TTL load). The clock signal is brought out to facilitate conversion from character serial to parallel data.

REFERENCE OUTPUT

A 6.4V ±5% analog reference output is made available. This reference should be buffered and filtered if used in external circuitry.

POWER INPUT

- +5VDC ±5%, 1.45 watts.

CALIBRATION ADJUSTMENTS (See Application Section for calibration instructions)

- Gain
- Zero
- Recommended recalibration interval: six months.

SIZE

3"W x 1.8"H x 1.25"D (76 x 46 x 32mm)
1.90" (48mm) overall depth to rear of card edge connector
Panel cutout required: 3.175" x 1.810" (80.65 x 45.97mm)

WEIGHT

4 ounces, (115 grams)

OPTIONS - ORDERING GUIDE

Input Voltage Range: AD2021 - 1.999VDC Full Scale
AD2021/S - 199.9mVDC Full Scale
(Consult the factory or representative for other input ranges)
Display Lens Option3: Lens 5 - Red with ADI logo
Lens 6 - Red without ADI logo

CONNECTOR

30 pin, 0.156" spacing card edge connector. Viking 2VK15D/1-2 or equivalent.
Optional: Order AC1501

1 Guaranteed at 25°C and nominal supply voltage
2 Guaranteed
3 If no lens is specified, Lens 5 will be supplied

Specifications subject to change without notice.

APPLYING THE AD2021
WIRING CONNECTIONS

Figure 1 is a wiring diagram for AD2021 applications. The "limited differential" input uses a 47Ω resistor to isolate the analog input from digital and power supply sections to prevent ground loop problems. The analog ground must be connected to Pin 14 only, since there may be up to ±200mV difference in voltage between this input and the digital ground.

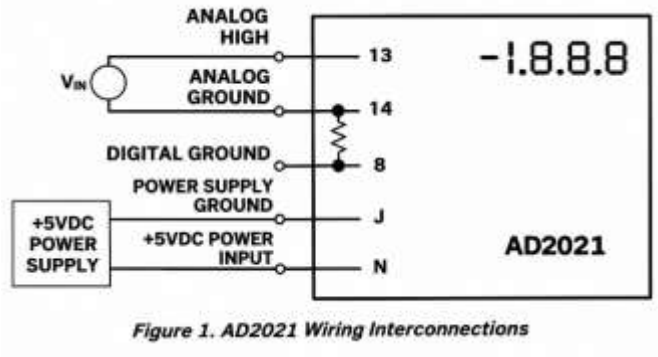

Figure 1. AD2021 Wiring Interconnections

DISPLAY BLANKING

Grounding, or Logic "0" blanks the three data digits, but does not affect the polarity sign, decimal points, or overrange digit (if on). The display reading is valid upon removal of a blanking signal.

DISPLAY HOLD

Grounding, or Logic "0" causes the DPM to cease conversions and display the data from the last conversion. After a "HOLD" input is removed, the auto zero conversion circuitry requires one to two conversions before the display is again valid.

REFERENCE VOLTAGE OUTPUT

A stable +6.4V analog reference voltage is supplied as an output on Pin 10. It can be used as a reference for external circuitry, but it must be buffered by an operational amplifier and scaled externally to the DPM in order to not affect the accuracy of the DPM itself.

EXTENDED RANGE MEASUREMENTS

Although the full scale range of the AD2021 is 2000 counts, and it flashes the display to indicate overrange beyond this point, it actually makes measurements up to approximately 3000 counts. Beyond this point, it will flash a constant number. Thus, one can use this extra measurement range as a guide to reducing the input to the normal range. Note that thedisplay will flash only the three full digits, as it is impossible to flash a "2" on the overrange readout. Thus, a reading of 2.300 (or 230.0mV on an AD2021/S) will read as "300" and will be flashing.

INTERFACING DATA OUTPUTS

The BCD data outputs are in a bit parallel, character serial format. There are four BCD bit outputs (1, 2, 4, 8) and four digit outputs (10^0, 10^1, 10^2, 10^3). The BCD digits are gated onto the output lines sequentially, and the BCD bits are valid for the digit whose digit line is high. The data is valid except when being updated, which occurs within 2 milliseconds after the status line goes low.

The scheme shown in Figure 2 can be used to latch the bit parallel, character serial outputs of the AD2021 to provide parallel data for printers, comparators and other data interface devices. The "HOLD" input of the AD2021 can be used to prevent updating of the data outputs.

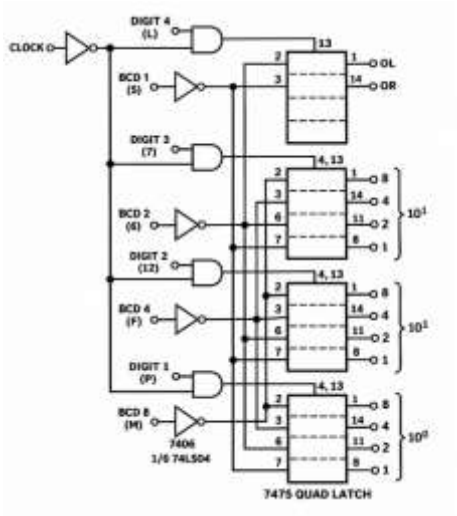

Figure 2. AD2021 Bit Parallel Character Serial to Full Parallel Data Conversion. AD2021 Pin Connections Are Shown in Parentheses.

CALIBRATION PROCEDURES

A precision voltage reference is needed for the calibration of the AD2021. The location of the calibration potentiometers is shown in Figure 3. Always adjust the zero offset before the gain if zero adjustment is necessary.

Zero Adjustment: Short the signal inputs (Pins 13 and 14) and adjust the zero offset potentiometer until the meter reads 000.

Gain Adjustment: Apply an input of +1.800V (+180.0mV on AD2021/S models) and adjust the gain potentiometer until the meter reads 1800 exactly.

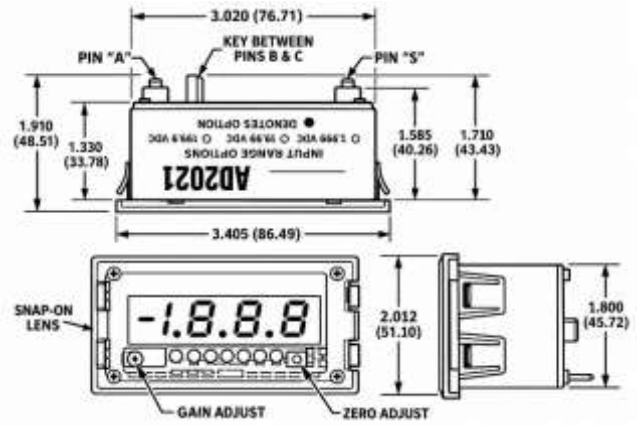

Figure 3. AD2021 Mechanical Outline
(All Dimensions Are Given in Inches and (mm))

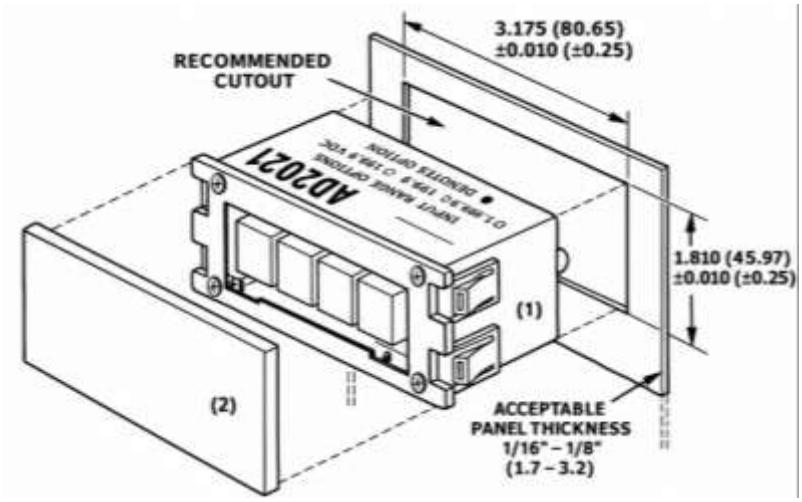

Figure 4. Snap In Case Assembly
(1) DPM SNAPS INTO PANEL, IS HELD IN PLACE BY RETAINING FINGERS (DEPRESS TO REMOVE)
(2) LENS ASSEMBLY SNAPS ONTO DPM

AD2021 CONNECTOR PIN DESIGNATIONS

PIN REF	PIN FUNCTION
1	NC
2 ← KEY	CLOCK
3	NC
4	DP1XX.X
5	BCD 1
6	BCD 2
7	DIGIT 3 (10^2)
8	DIGITAL GND[2]
9	ANALOG HIGH[1]
10	REF OUT
11	NC
12	DIGIT 2 (10^1)
13	ANALOG HIGH[1]
14	ANALOG GND
15	DP2X.XX

PIN REF	PIN FUNCTION
A	NC
B	NC
C	NC
D	HOLD
E	POLARITY
F	BCD 4
H	BLANKING
J	DIGITAL GND[2]
K	STATUS
L	DIGIT 4 (10^3)
M	BCD 8
N	+5 SUPPLY
P	DIGIT 1 (10^0)
R	NC
S	DP1.XXX

NOTE 1. PIN 13 AND PIN 9 ARE BOTH ANALOG HIGH INPUTS

NOTE 2. PIN 8 AND PIN J MAY BE USED INTERCHANGEABLY AS DIGITAL GROUND AND POWER SUPPLY RETURN.